RS31330 • RS31331 • RS31332 16V, 7A eFuse with Load Transient Blanking

Features

Performance

- Wide 2.97V to 16V operating range
- Integrated 5.8mΩ pass MOSFET
- Adjustable output slew rate (dV/dt)

Protection

- Programmable current limit (0.87A to 7.7A)
- Fast short-circuit protection
- Integrated overtemperature protection
- Configurable input overvoltage protection:
  - Adjustable Overvoltage Lockout (OVLO)
  - Selectable Overvoltage Clamp (OVC)
- Adjustable overcurrent blanking timer (ITIMER) for high transient loads

Fault Management

- Active current limiting or circuit-breaker operation
- Latch-off or auto-retry thermal fault response
- Power Good (PG) or Fault (FLT) status output (device dependent)

Monitoring and Control

- Accurate ILIM current monitor output
- Adjustable input UVLO threshold
- Enable input for system power sequencing

Package & Compliance

- Compact 2mm × 2mm QFN-10 package
- RoHS compliant

Applications

- Server, PC mother board
- PCI and PCIe cards
- Appliances and power tools
- Smartphones and tablets
- Industrial systems

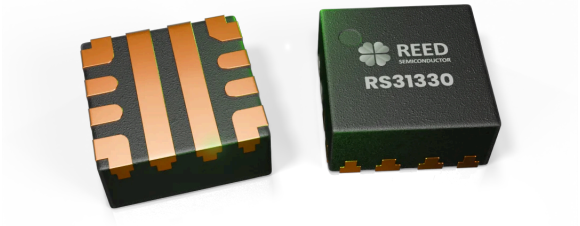

Description

The RS31330, RS31331, and RS31332 are integrated eFuse protection switches designed to safeguard low-voltage power rails from overcurrent, overvoltage, short-circuit, and overtemperature fault conditions. Each device integrates a low-resistance 5.8mΩ MOSFET with precision current monitoring to provide compact, high-performance power-path protection.

The programmable current limit is set with an external resistor, while the ITIMER pin allows transient overcurrent events to be ignored without nuisance shutdown. During severe faults, the device provides fast short-circuit protection with programmable fault response, supporting either active current limiting or circuit-breaker operation.

The OVCSEL pin provides selectable output overvoltage clamp thresholds of 3.89V, 5.76V, or 13.8V, while the OVLO pin enables an adjustable input overvoltage lockout threshold for additional system protection. Programmable output slew rate minimizes inrush current during startup, and integrated thermal protection ensures robust operation under abnormal conditions.

The family also features enable control, adjustable UVLO, Power Good/Fault indication, and an accurate load-current monitor output, making it well suited for servers, PCIe cards, industrial equipment, smartphones, tablets, and other space-constrained electronic systems.

The devices are available in a compact 2mm × 2mm QFN-10 package.

Typical Application Circuit

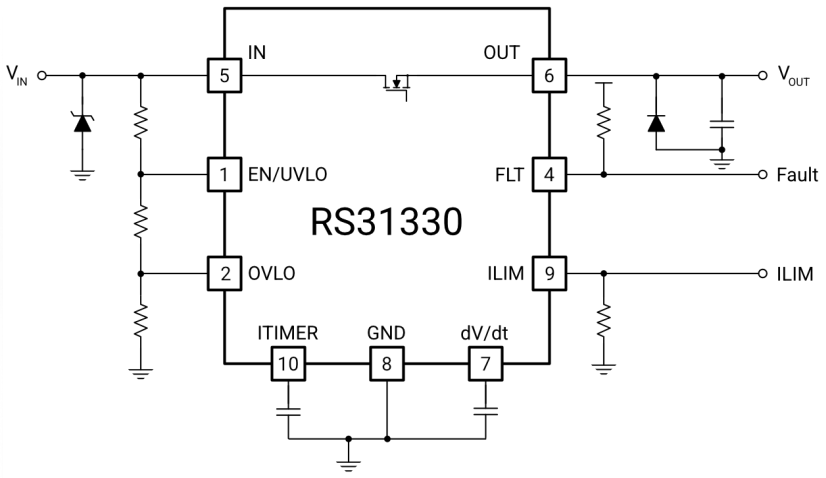

© 2026 Reed Semiconductor datasheet. All rights reserved

Device Comparison Table

PART NUMBER	OVERVOLTAGE PROTECTION	OVERCURRENT RESPONSE	POWER GOOD	FAULT	OVERTEMPERATURE FAULT REPONSE
RS31330A	Adjustable OVLO	Current Limit	No	Yes	Latch-off
RS31330B	Adjustable OVLO	Current Limit	No	Yes	Auto-retry
RS31331A	Selectable OVC	Current Limit	Yes	No	Latch-off
RS31331B	Selectable OVC	Current Limit	Yes	No	Auto-retry
RS31332A	Adjustable OVLO	Circuit Breaker	Yes	No	Latch-off
RS31332B	Adjustable OVLO	Circuit Breaker	Yes	No	Auto-retry

Note: OVC = Overvoltage Clamp, OVLO = Overvoltage Lock-out

Ordering Information

PART NUMBER	PACKAGE	SIZE	MSL RATING	SHIPPING METHOD	PACKAGE MARKING
RS31330AR	QFN - 10	2 × 2	Level - 2	3000u Tape & Reel	330A
RS31330BR	QFN - 10	2 × 2	Level - 2	3000u Tape & Reel	330B
RS31331AR	QFN - 10	2 × 2	Level - 2	3000u Tape & Reel	331A
RS31331BR	QFN - 10	2 × 2	Level - 2	3000u Tape & Reel	331B
RS31332AR	QFN - 10	2 × 2	Level - 2	3000u Tape & Reel	332A
RS31332BR	QFN - 10	2 × 2	Level - 2	3000u Tape & Reel	332B

Top Marking

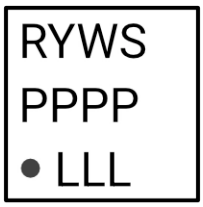

Line 1

- R: Prefix of Reed Semiconductor (R replaced by R for engineering lot)
- Y: Year code
- W: Week code
- S: Assembly site code

Line 2

- PPPP; Truncated part number

Line 3

- LLL: Lot code

© 2026 Reed Semiconductor datasheet. All rights reserved

Package Reference

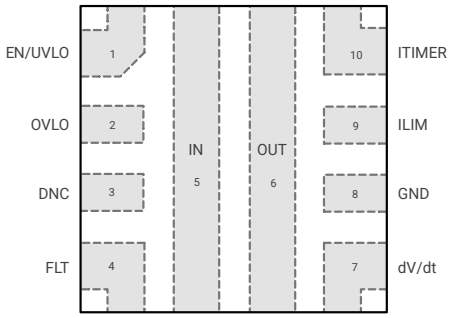

Top View - RS31330

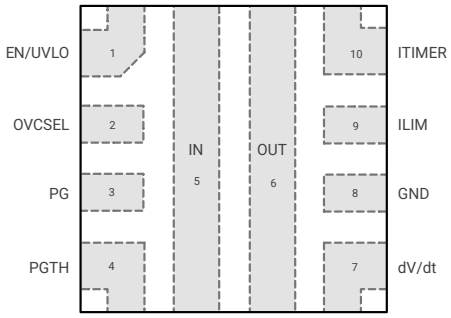

Top View - RS31331

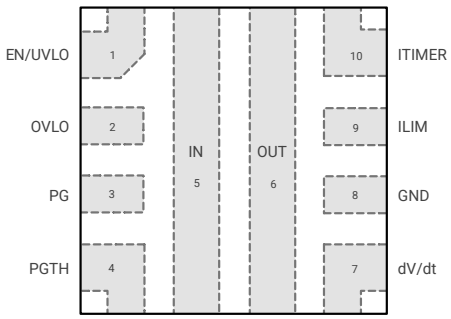

Top View - RS31332

© 2026 Reed Semiconductor datasheet. All rights reserved

Pin Descriptions

PIN	NAME	TYPE	DESCRIPTION
1	EN/UVLO	I	Active-high enable and UVLO input. Pull high to enable the device and pull low to disable it. Connect to a resistor divider from VIN to GND to set the input UVLO threshold. Do not leave this pin floating.
2	OVLO	I	RS31330/RS31332: Input overvoltage lockout input. Connect to a resistor divider from VIN to GND to set the OVLO threshold. This pin also functions as an active-low enable input. Do not leave this pin floating.
	OVCSEL	I	RS31331: Output overvoltage clamp threshold select input. Selects the fixed output clamp threshold.
3	PG	O	RS31331/RS31332: Power Good output. Open-drain output that asserts high (with an external pull-up) when the internal MOSFET is fully enhanced and the PGTH input exceeds the programmed threshold.
	DNC	—	RS31330: Do not connect. Leave this pin floating.
4	FLT	O	RS31330: Fault output. Open-drain output pulled low when a fault condition is detected.
	PGTH	I	RS31331/RS31332: Power Good threshold input. Sets the output voltage threshold for PG assertion.
5	IN	P	Input supply voltage. Connect to the protected power source.
6	OUT	P	Protected output voltage. Connect to the load.
7	dV/dt	I	Output slew-rate control. Connect a capacitor from this pin to GND to program the output voltage rise time during turn-on.
8	GND	G	Device ground. Connect directly to the system ground plane.
9	ILIM	I	Current-limit set and current-monitor output. Connect a resistor from ILIM to GND to program the output current limit. The ILIM voltage provides an analog indication of output current. Do not leave this pin floating.
10	ITIMER	I	Overcurrent blanking timer. Connect a capacitor from ITIMER to GND to set the transient overcurrent blanking time, allowing temporary load transients above the programmed current limit but below the fast-trip threshold. Leave the pin open for the fastest Overcurrent response.

Type: I = Input, O = Output, I/O = Bidirectional, P = Power, G = Ground, — = No Connect.

© 2026 Reed Semiconductor datasheet. All rights reserved

Package Dimensions

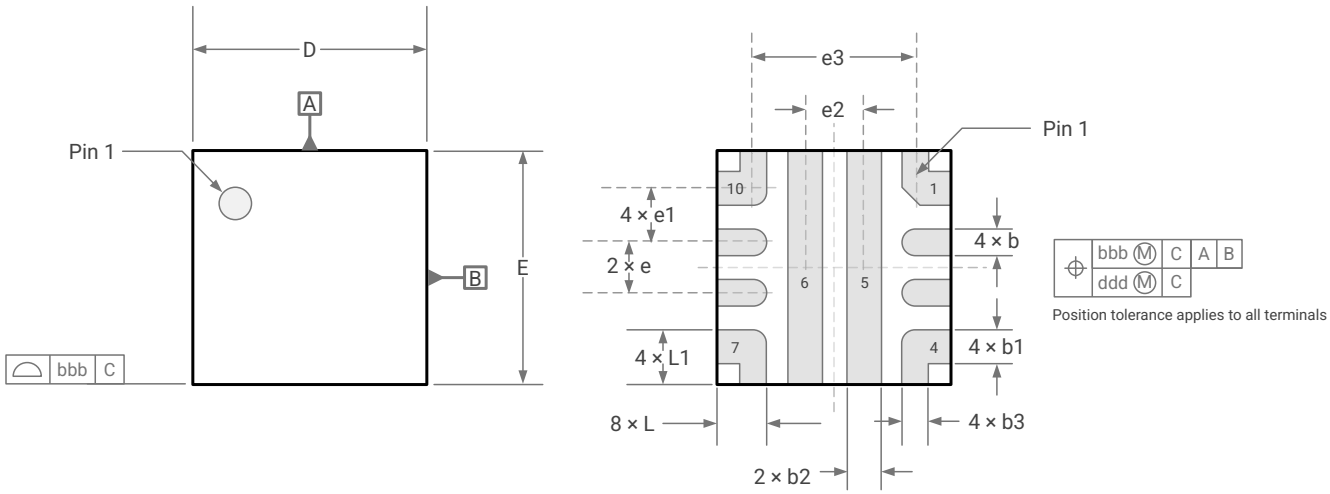

TOP VIEW

BOTTOM VIEW

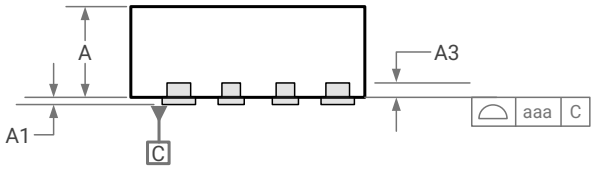

SIDE VIEW

Notes

1. All dimensions are in millimeters.
2. Dimension b is measured 0.15 mm to 0.30 mm from the terminal tip. If an end radius is present, exclude the radius from the measurement.
3. Coplanarity applies to the exposed pad and all terminals.
4. Drawing is not to scale.

REF	MIN	NOM	MAX
A	0.750	0.850	0.950
A1	—	—	0.050
A3		0.023 Ref.	
D	1.900	2.000	2.100
E	1.900	2.000	2.100
b	0.200	0.250	0.300
b1	0.250	0.300	0.350
b2	0.250	0.300	0.350
b3	0.200	0.250	0.300
e		0.450 BSC	
e1		0.475 BSC	
e2		0.500 Ref.	
e3		1.450 Ref.	
L	0.300	0.400	0.500
L1	0.400	0.450	0.500
Geometric Tolerances			
aaa		0.08	
bbb		0.10	
ddd		0.05	

© 2026 Reed Semiconductor datasheet. All rights reserved

Recommended Land Pattern

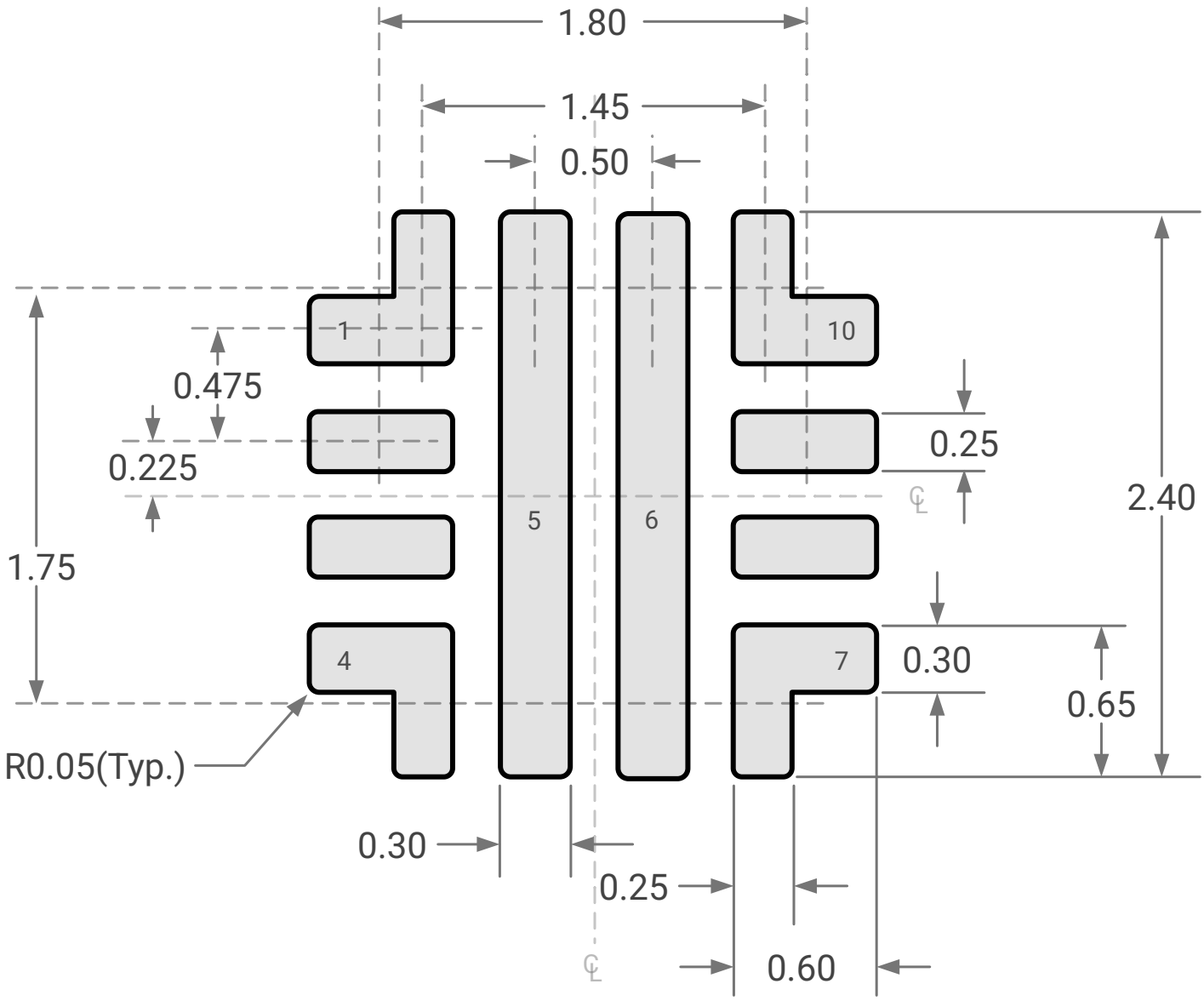

Note: All measurements are nominal

© 2026 Reed Semiconductor datasheet. All rights reserved

Tape and Reel Information

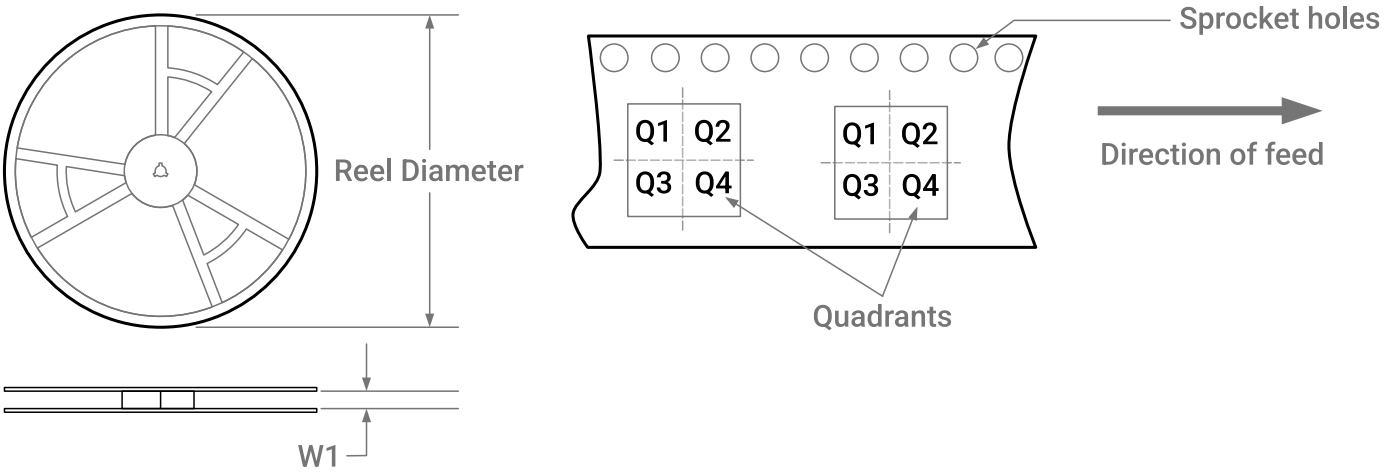

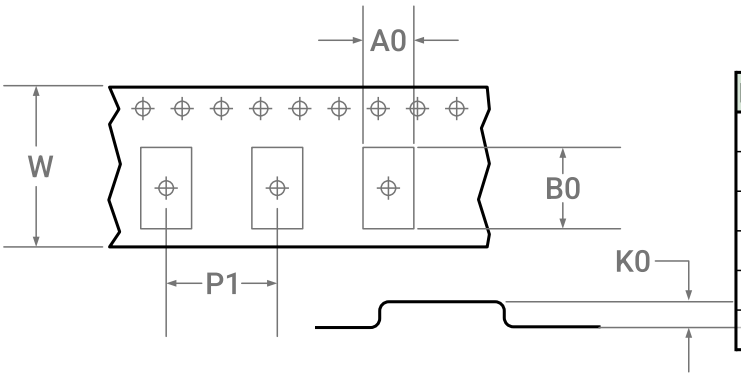

DIMENSION	DESCRIPTION
A0	Pocket width
B0	Pocket length
K0	Pocket depth
W1	Reel width
W	Carrier tape width
P1	Pocket pitch

PACKAGE SIZE	REEL DIAMETER	W1	A0	B0	K0	P1	W	QUADRANT
2 × 2	178	9.5	2.2	2.2	1.1	4.0	8.0	Q2

Note:
1. All dimensions are nominal
2. All dimensions are in millimeters (mm)

© 2026 Reed Semiconductor datasheet. All rights reserved

Pizza Box Dimensions

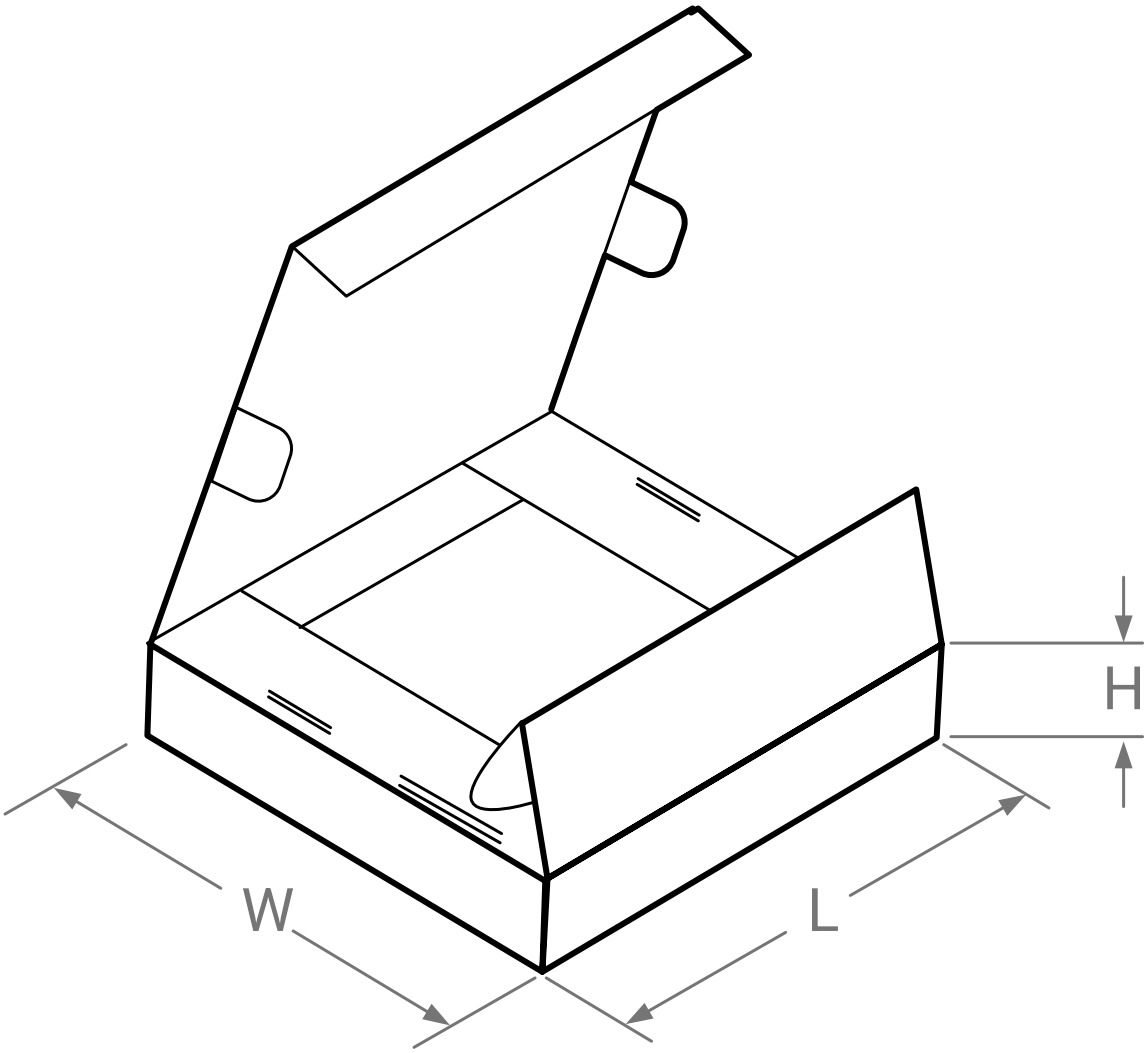

PACKAGE SIZE	UNITS / BOX	LENGTH	WIDTH	HEIGHT
2 × 2	3000	205	200	25

Notes:

1. All measrements are in millimeters;
2. All mesaurements are nominal.

© 2026 Reed Semiconductor datasheet. All rights reserved