RS31385 • RS31387 4.5V to 16V, 50A Stackable eFuse with Current Monitoring

Features

Protection & Reliability

- 4V to 16V operating range
- 50A continuous current; 60A peak current
- Integrated 0.8mΩ pass MOSFET
- Parallel operation for higher current applications

Startup & Protection

- Adjustable soft-start for inrush current control
- Adjustable current limit
- Fixed 100A short-circuit fast-trip threshold
- Input OVP, OCP, OTP, and short-circuit protection
- MOSFET failure detection
- Latch-off fault response: RS31385
- Auto-retry fault response: RS31387

Monitoring & Fault Reporting

- Current-monitor output with ±1.5% accuracy
- Analog temperature-monitor output
- Active-low, open-drain fault indication (GOK)
- Overcurrent indication output (D_OC)

Package

- LGA-32, 5mm x5mm
- RoHS Compliant

Description

The RS31385 and RS31387 are stackable 50A eFuses with integrated 0.8mΩ pass MOSFETs for hot-swap and power-path protection in server, networking, and PCIe applications. The devices operate over a 4V to 16V input range, support 60A peak current, and can be connected in parallel for higher-current applications.

An external resistor connected between CLREF and ground sets the current limit. A capacitor connected between SS and ground programs the output soft-start time to control inrush current during startup. Integrated current sensing provides a current-monitor output for system monitoring.

Protection features include input overvoltage, overcurrent, short-circuit, and overtemperature protection, along with MOSFET drain-to-source and gate-to-source short-circuit detection. A fixed 100A short-circuit fast-trip threshold triggers turn-off of the internal MOSFET. The active-low, open-drain GOK output signals a detected fault to the system.

The RS31385 provides latch-off operation, while the RS31387 provides Auto-Retry operation. Both devices are available in a compact 5mm × 5mm, 32-pin LGA package..

Applications

- Server and AUX supplies
- • PCI and PCIe cards
- • Disk Drives
- • Router and Networking
- • Laptops

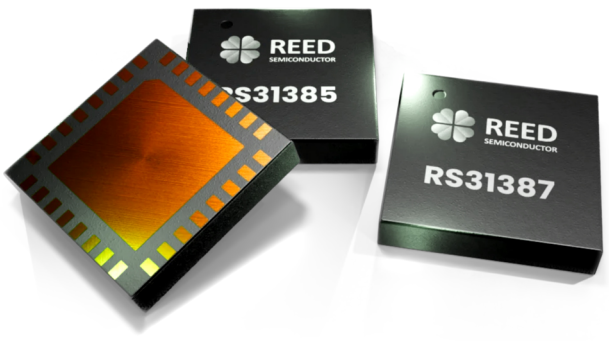

Typical Application Circuit

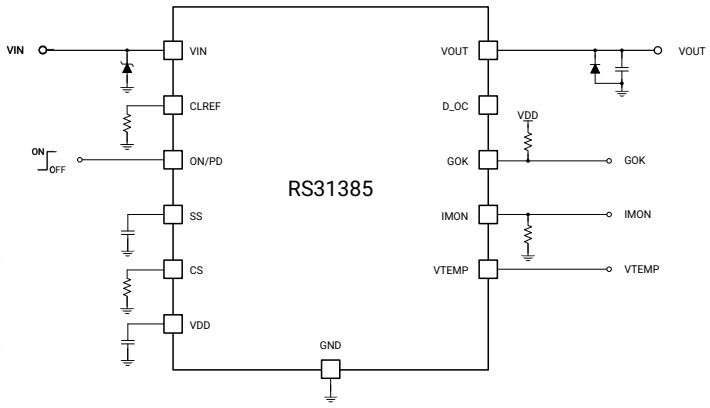

© 2026 Reed Semiconductor datasheet. All rights reserved

Parallel Operation

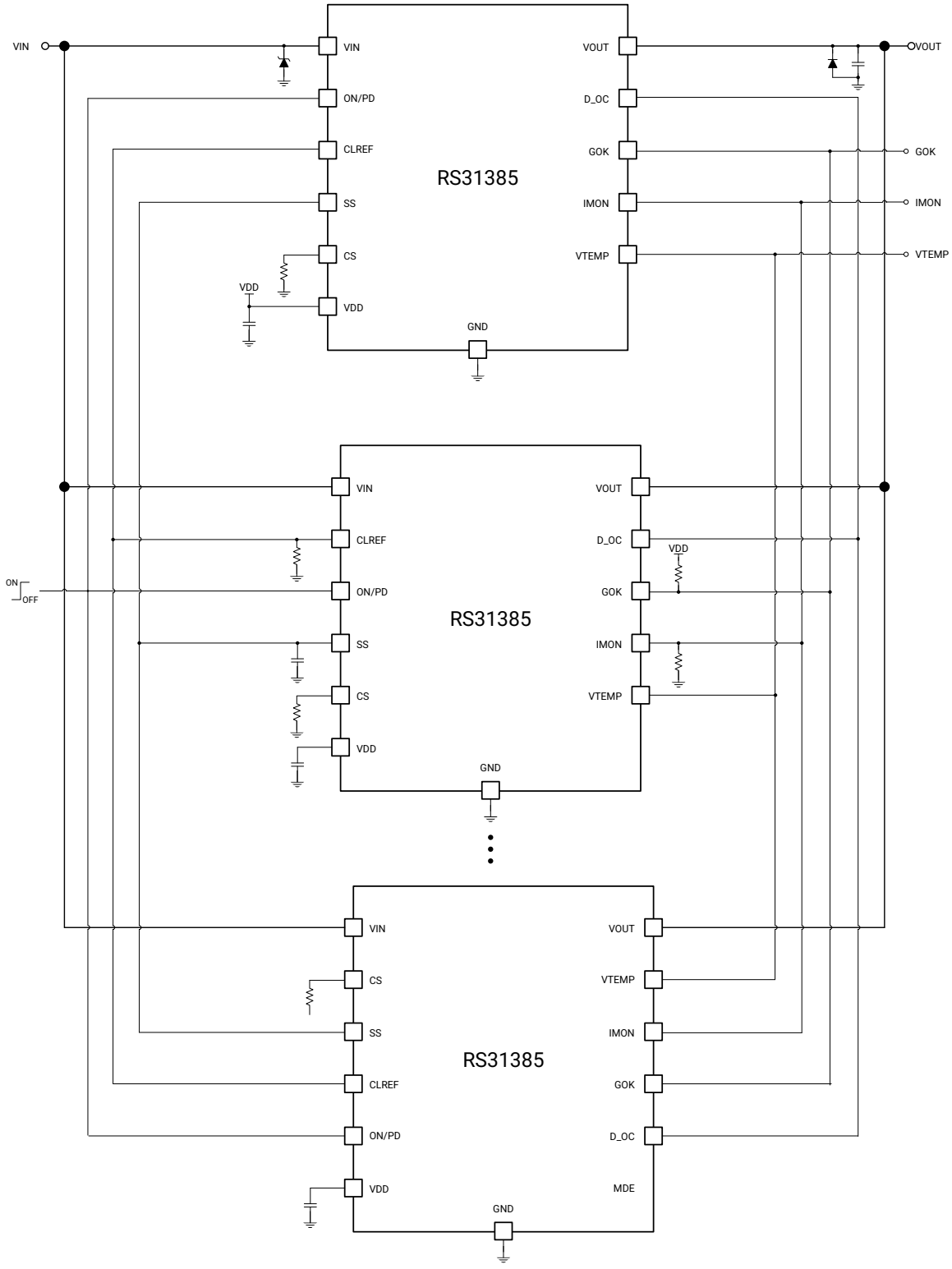

© 2026 Reed Semiconductor datasheet. All rights reserved

Package Reference

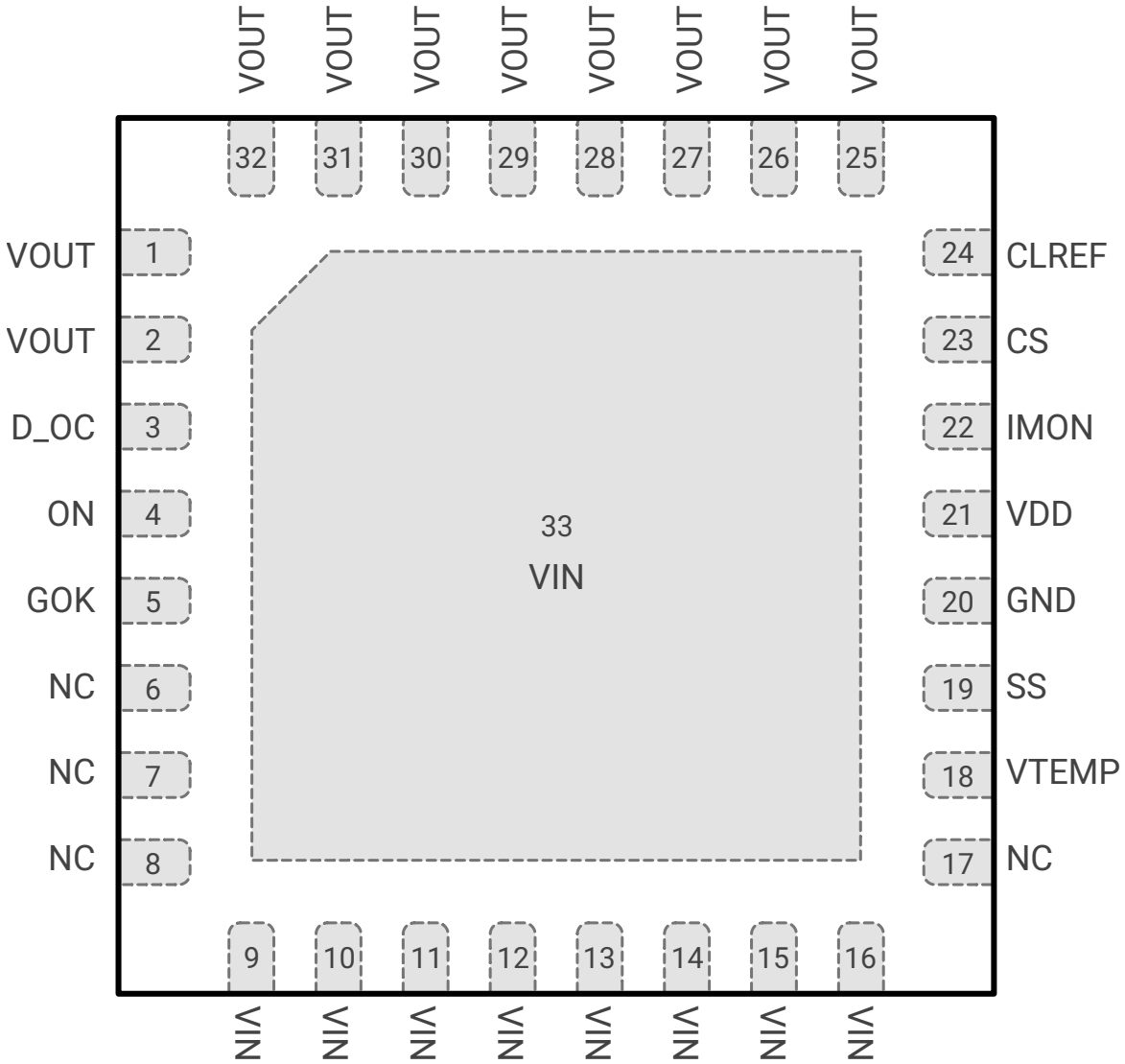

Top View

© 2026 Reed Semiconductor datasheet. All rights reserved

Orderable Options

PART NUMBER	FAULT RESPONSE	PACKAGE	SIZE (mm)	MSL RATING	SHIPPING METHOD	PACKAGE MARKING
RS31385R	Latch-off	LGA - 32	5 × 5	Level - 3	3000u Tape & Reel	R31385
RS31387R	Auto-retry	LGA - 32	5 × 5	Level - 3	3000u Tape & Reel	R31387

Top Marking

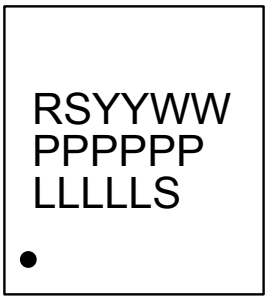

Line 1

- RS: Prefix of Reed Semiconductor (RS replaced by RE for engineering lot)
- YY: Year code
- WW: Week code

Line 2

- PPPPPP; Truncated part number

Line 3

- LLLLL: Lot code
- S: Assembly site code

Note: To improve clarity, this datasheet explicitly identifies all configurable ordering options. Earlier part numbers that omitted default option designators remain valid and fully supported.

© 2026 Reed Semiconductor datasheet. All rights reserved

Pin Descriptions

PIN	NAME	TYPE	DESCRIPTION
1, 2, 25—32	VOUT	P	Power output. An external Schottky diode connected between VOUT and GND can clamp negative voltage transients at the output.
3	D_OC	O	Open-drain overcurrent indication output.
4	ON/PD	I	Power MOSFET enable and output pull-down control input. Drive high to turn on the internal power MOSFET or low to turn it off. An intermediate input voltage enables output discharge through an internal pull-down resistor after a delay. See the Electrical Characteristics table and the output-discharge functional description for applicable levels and timing. For the RS31385, toggling ON/PD does not clear a latched fault; VIN or the internal supply must be cycled to reset the device.
5	GOK	O	Active-low, open-drain fault indication output. Connect a pull-up resistor from GOK to VDD. GOK is pulled low when a monitored fault occurs. See the GOK Report section for the reported fault conditions.
6, 7, 8	NC	—	No connect.
9—16, 33	VIN	P	Power input. Connect to the input supply.
17	NC	—	No connect.
18	VTEMP	O	Analog temperature-monitor output. See the Electrical Characteristics table for the output-voltage characteristic.
19	SS	I	Soft-start timing node. Connect a capacitor between SS and GND to program the output soft-start time during startup.
20	GND	G	Signal ground reference.
21	VDD	P	Internal 3.3V LDO output. Connect a decoupling capacitor of 1µF or greater between VDD and GND.
22	IMON	O	Analog current-monitor output. Connect a resistor between IMON and GND to convert the output current into a voltage representing the current through the internal power MOSFET. See the Electrical Characteristics table for the current-monitor scaling.
23	CS	O	Current-sense output. The voltage at CS is compared with the CLREF voltage to determine the overcurrent threshold.
24	CLREF	I	Current-limit reference node. Connect a resistor between CLREF and GND to set the overcurrent comparator reference voltage.

Type: I = Input, O = Output, I/O = Bidirectional, P = Power, G = Ground, — = No Connect.

© 2026 Reed Semiconductor datasheet. All rights reserved

Package Dimensions

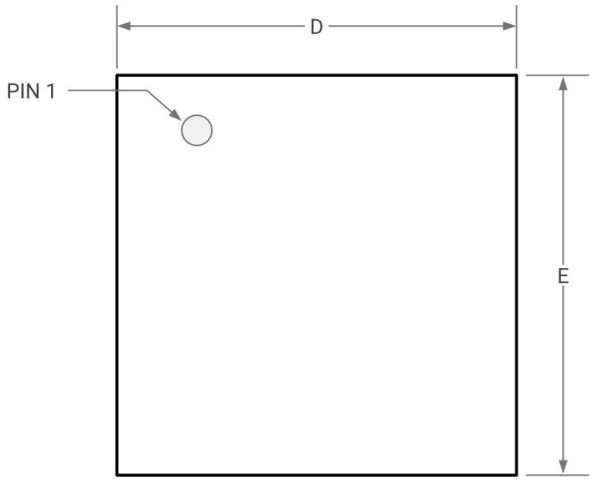

TOP VIEW

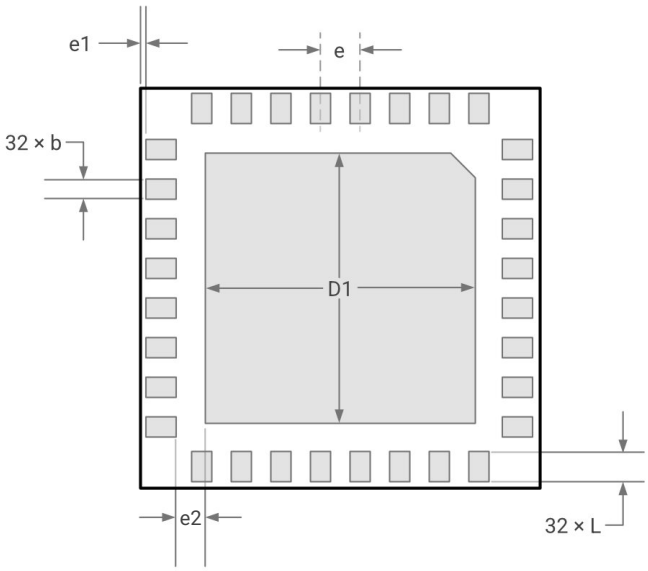

BOTTOM VIEW

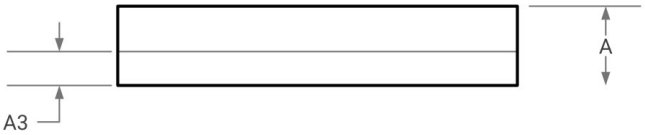

SIDE VIEW

REF	MIN	NOM	MAX
A	0.80	0.90	1.00
A3	0.36	0.40	0.44
D	4.90	5.00	5.10
E	4.90	5.00	5.10
D1	3.30	3.40	3.50
E1	3.30	3.40	3.50
e	0.500 BSC		
L	0.375 BSC		
b	0.250 BSC		
e1	0.075 BSC		
e2	0.350 BSC		

Notes

1. All dimensions are in millimeters.
2. Lead coplanarity shall be 0.1 millimeter max.
3. Drawing is not to scale.

© 2026 Reed Semiconductor datasheet. All rights reserved

Recommended Land Pattern

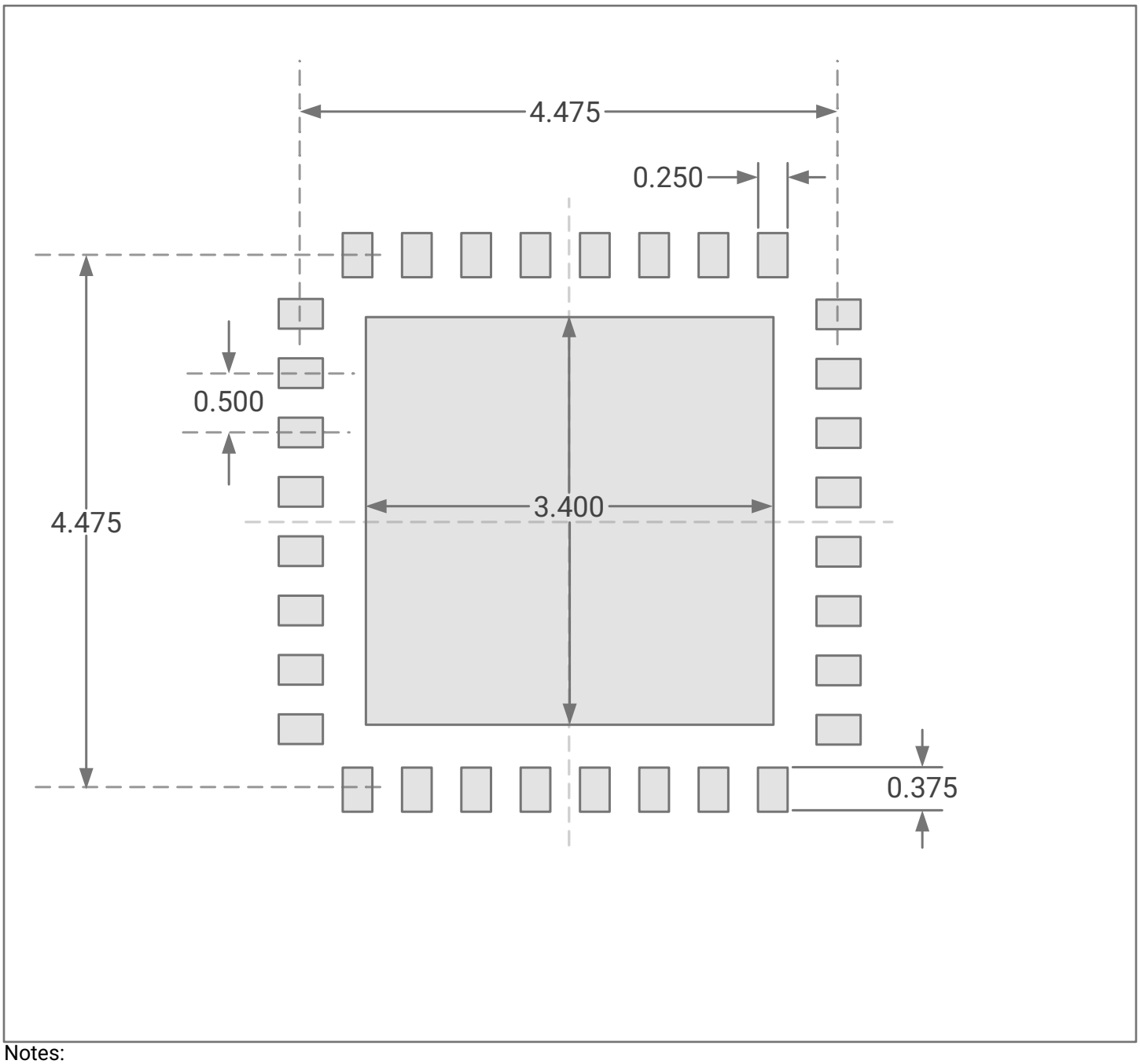

Notes:

1. All dimensions are in millimeters
2. Drawing is not to scale.

© 2026 Reed Semiconductor datasheet. All rights reserved

Tape and Reel Information

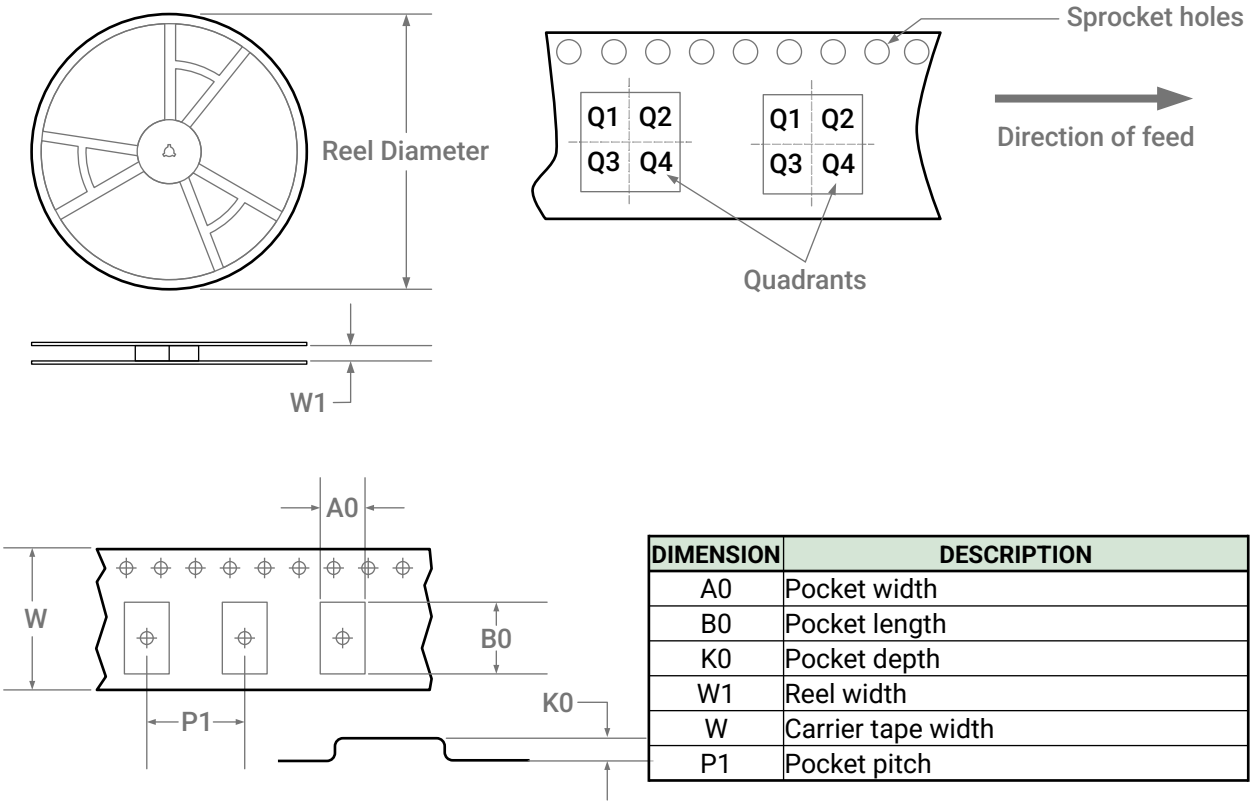

DIMENSION	DESCRIPTION
A0	Pocket width
B0	Pocket length
K0	Pocket depth
W1	Reel width
W	Carrier tape width
P1	Pocket pitch

DEVICE SIZE	REEL DIAMETER	W1	A0	B0	K0	P1	W	PIN 1 QUADRANT
5 × 5	330	12.4	5.2	5.4	1.10	8.0	12.0	Q2

Notes:

1. All dimensions are in millimeters
2. All dimensions are nominal

© 2026 Reed Semiconductor datasheet. All rights reserved

Recommended Land Pattern

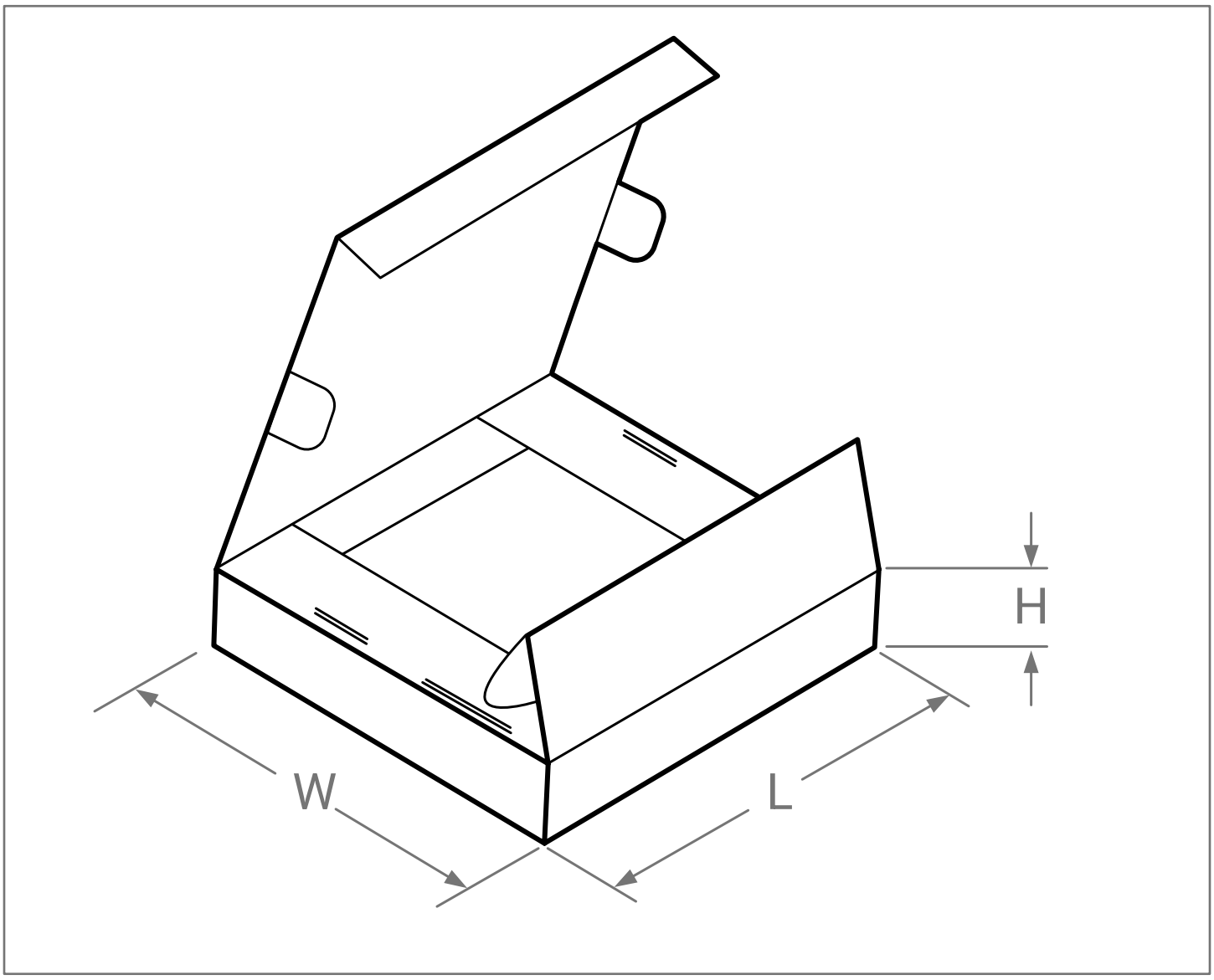

DEVICE SIZE	UNITS/BOX	L	W	H
5 × 5	3000	358	340	50

Notes:

1. All dimensions are in millimeters
2. All dimensions are nominal

© 2026 Reed Semiconductor datasheet. All rights reserved