RS31210 • RS31310 5A 5V/12V eFuse

Features

Product Options

- 5V eFuse — RS31210
- 12V eFuse — RS31310

Protection Features

- Integrated 25mΩ pass MOSFET
- Adjustable 2A — 5A current limit
- Fixed overvoltage clamp
  - 6.1V (RS31210)
  - 15V (RS31310)
- Overtemperature protection

Control & Configuration

- Adjustable UVLO threshold
- Adjustable output slew rate (dV/dt control)
- EN on/off control

Compliance & Package

- ROHS compliant
- 3mm × 3mm VSON-10 package

Applications

- Server and AUX supplies
- PCI and PCIe cards
- Adapter powered devices
- HDD and SSD

Description

The RS31210 and RS31310 are integrated eFuse protection switches that provide reliable over-current, over-voltage, and over-temperature protection for 5V and 12V power rails. An integrated 25mΩ MOSFET minimizes power loss while reducing external component count.

The adjustable current limit, programmable input UVLO threshold, and configurable output slew rate enable designers to tailor protection and startup behavior to their application. Fixed output over-voltage clamps provide additional protection during fault conditions, while the EN pin allows simple system-level power sequencing.

Housed in a compact 3 × 3 mm VSON-10 package, the RS31210 and RS31310 are ideal for PCIe cards, storage devices, server power rails, and other applications requiring compact, reliable power-path protection.

PART NUMBER	PACKAGE	BODY SIZE
RS31210	VSON-10	3 × 3 mm
RS31310		

Typical Application Circuit

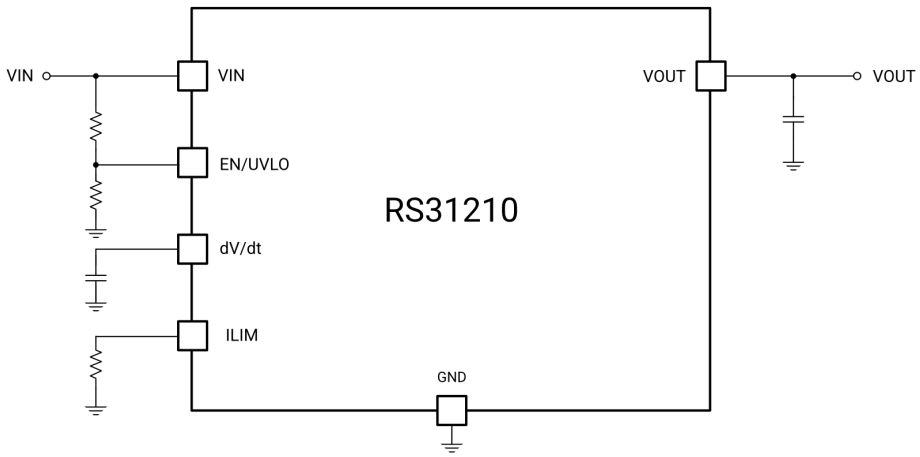

@ 2026 Reed Semiconductor datasheet. All rights reserved

Package Reference

Top View

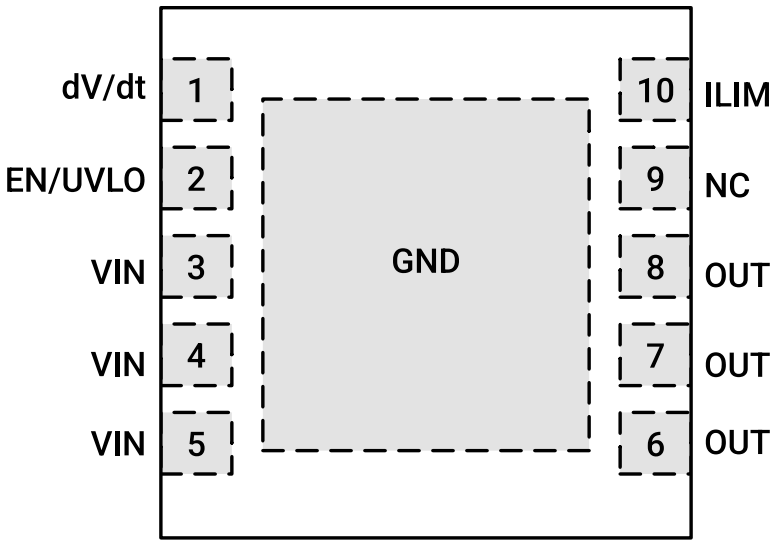

VSON-10 (3 × 3 mm)

@ 2026 Reed Semiconductor datasheet. All rights reserved

Device Comparison Table

PART NUMBER	OVERVOLTAGE CLAMP	FAULT RESPONSE
RS31210A	6.1V	Latch-off
RS31210B	6.1V	Auto-retry
RS31310A	15V	Latch-off
RS31310B	15V	Auto-retry

Ordering Information

PART NUMBER	PACKAGE	SIZE	MSL	SHIPPING METHOD	PACKAGE MARKING
RS31210AR	VSON - 10	3 × 3 mm	Level-2	5000u Tape & Reel	R1210A
RS31210BR	VSON - 10	3 × 3 mm	Level-2	5000u Tape & Reel	R1210B
RS31310AR	VSON - 10	3 × 3 mm	Level-2	5000u Tape & Reel	R1310A
RS31310BR	VSON - 10	3 × 3 mm	Level-2	5000u Tape & Reel	R1310B

Top Marking

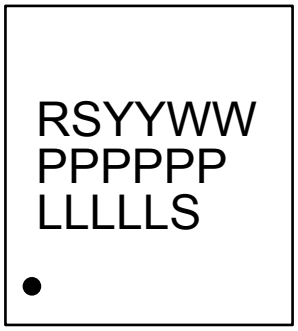

Line 1

- RS: Prefix of Reed Semiconductor (RS replaced by RE for engineering lot)
- YY: Year code
- WW: Week code

Line 2

- PPPPPP; Truncated part number

Line 3

- LLLLL: Lot code
- S: Assembly site code

@ 2026 Reed Semiconductor datasheet. All rights reserved

Pin Descriptions

PIN	NAME	TYPE	DESCRIPTION
1	dV/dt	I	Connect a capacitor to GND to program the output slew rate and limit inrush current during startup.
2	EN/UVLO	I	Logic enable input and programmable input UVLO threshold. Connect to a resistor divider from VIN to GND to set the UVLO threshold.
3 - 5	VIN	P	Input supply voltage.
6- 8	OUT	O	Protected output voltage.
9	NC	NC	No internal connection. May be left floating or connected to GND.
10	ILIM	I	Connect a resistor to GND to program the current limit.
11	GND	G	Device ground and exposed thermal pad connection.

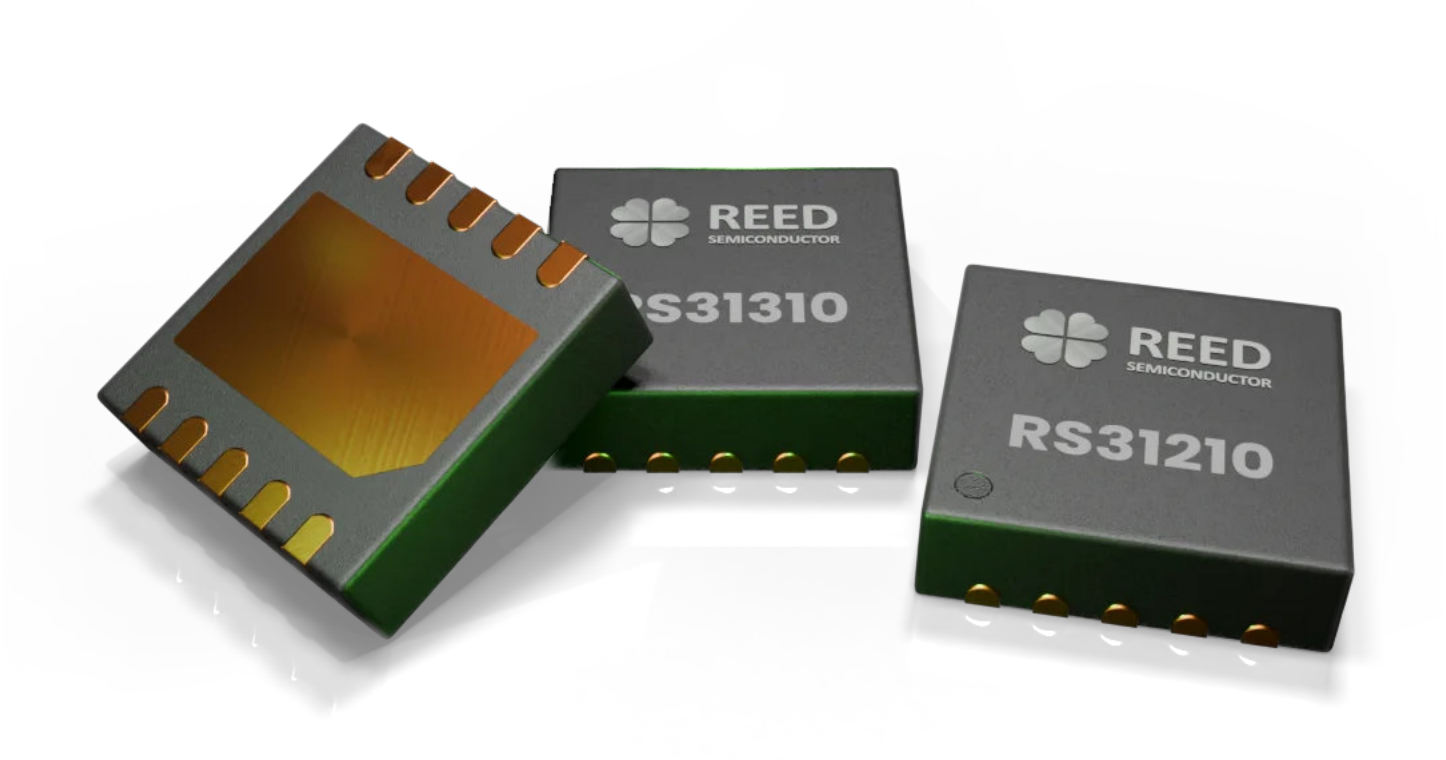

@ 2026 Reed Semiconductor datasheet. All rights reserved

PACKAGE DIMENSIONS

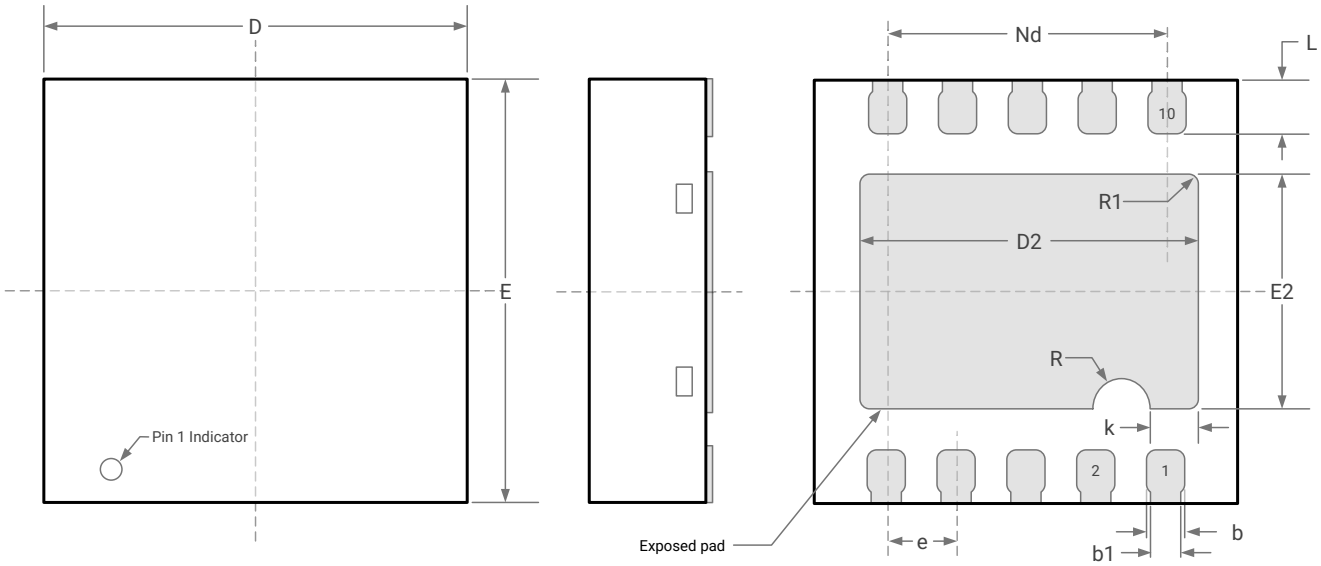

TOP VIEW

BOTTOM VIEW

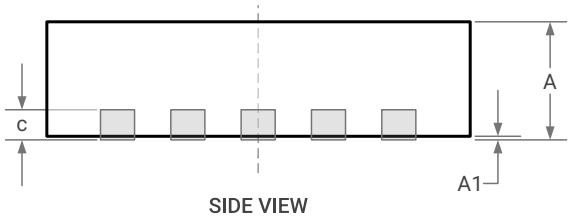

SIDE VIEW

REF	MIN	NOM	MAX
A	0.800	0.850	0.900
A1	0.00	0.02	0.050
b	0.20	0.25	0.30
b1		0.23 Ref.	
D	2.90	3.00	3.10
D2	2.35	2.40	2.45
e		0.50 BSC	
Nd		2.00 BSC	
E	2.90	3.00	3.10
E2	1.60	1.65	1.70
L	0.35	0.40	0.45
R		0.20 Ref.	
R1		0.075 Ref.	
k		0.35 Ref.	

Notes

1. All dimensions are in millimeters.
2. Dimension *b* applies to the metallized terminal and is measured between 0.15 mm and 0.30 mm from the terminal tip. If the terminal includes an optional radius at the opposite end, dimension *b* is measured excluding the radius.
3. The bilateral coplanarity zone applies to both the exposed thermal pad and the terminals.
4. Drawing is not to scale.

@ 2026 Reed Semiconductor datasheet. All rights reserved

RECOMMENDED LAND PATTERN

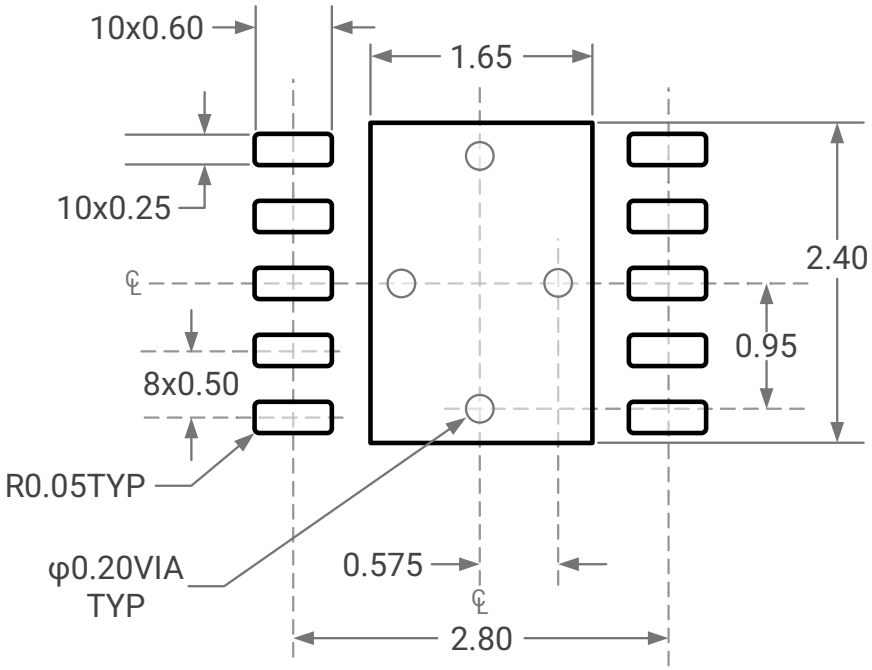

Note: All dimensions are in millimeters

@ 2026 Reed Semiconductor datasheet. All rights reserved

TAPE AND REEL INFORMATION

PIN

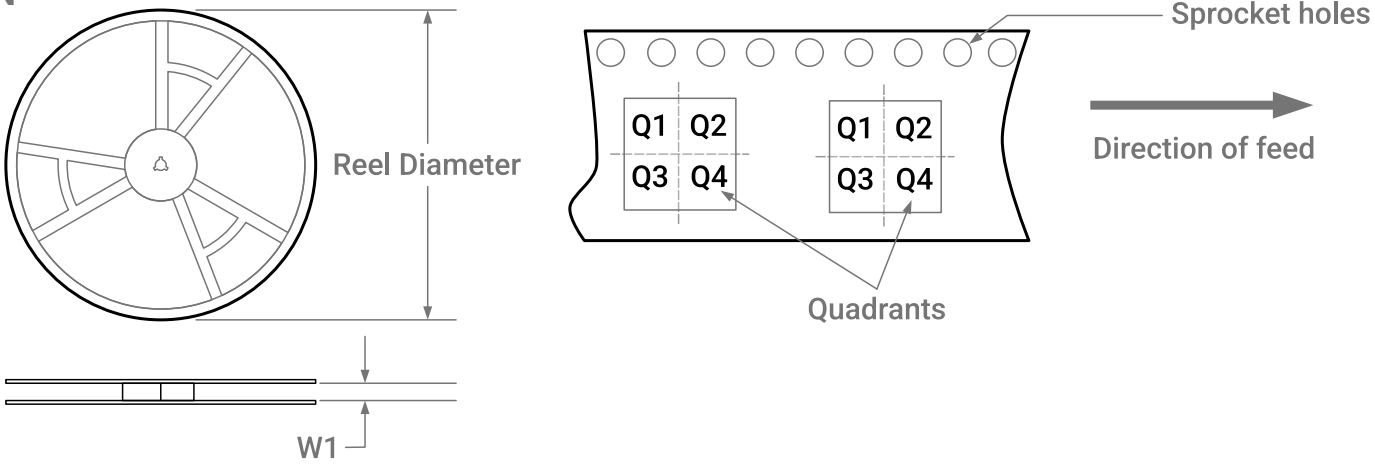

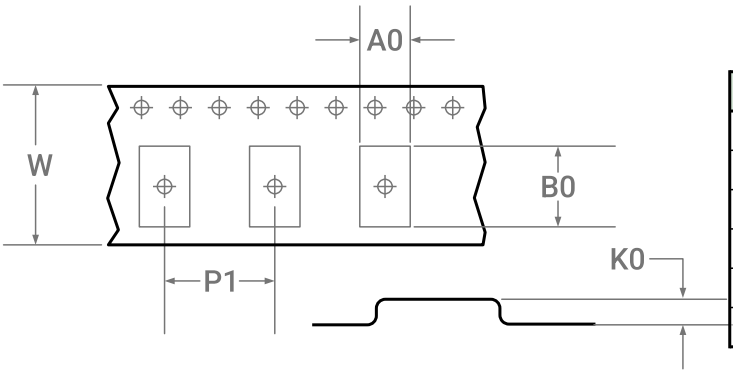

DIMENSION	DESCRIPTION
A0	Pocket width
B0	Pocket length
K0	Pocket depth
W1	Reel width
W	Carrier tape width
P1	Pocket pitch

DEVICE SIZE	REEL DIAMETER	W1	A0	B0	K0	P1	W	QUAD
3 × 3	330	12.8	3.3	3.3	1.10	8.0	12.0	Q2

Note:
1. All dimensions are nominal
2. All dimensions are in millimeters (mm)

@ 2026 Reed Semiconductor datasheet. All rights reserved

PIZZA BOX DIMENSIONS

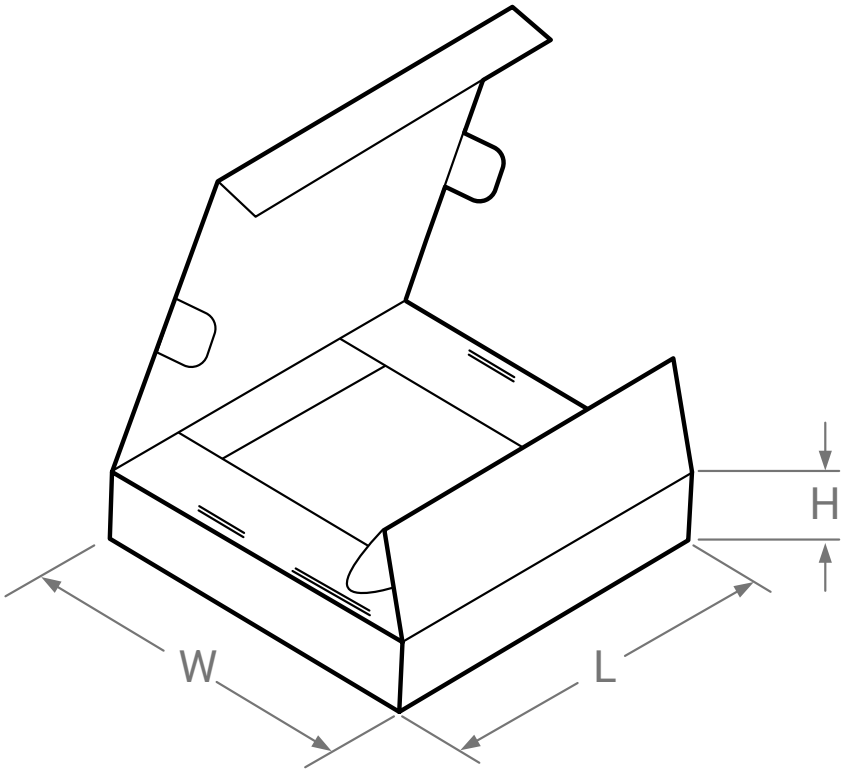

DEVICE DIM (mm)	**UNITS / BOX**	**L (mm)**	**W (mm)**	**H (mm)**
3 × 3	5000	355	340	50

Note: All measurements are nominal

@ 2026 Reed Semiconductor datasheet. All rights reserved