RS86610 — 16V, 30A Smart Power Stage with Current & Temperature Sensing

Features

Power Stage

- 2.5V to 16V operating input range
- 30A continuous output current, 60A maximum
- Integrated high-side and low-side MOSFETs with gate drivers
- Up to 3MHz switching frequency at 5V VIN
- Up to 2MHz switching frequency at 12V VIN
- 5V VDD supply

Interface and Sensing

- 3.3V-compatible tri-state PWM input
- Integrated current sensing
- Integrated temperature sensing

Protection

- VIN and VDD undervoltage lockout (UVLO)
- High-side overcurrent protection
- Cycle-by-cycle overcurrent limiting
- Overtemperature protection (OTP)

Package

- Compact 4mm × 5mm TLGA package
- RoHS compliant and Green

Applications

- Multiple and Redundant Power Sources
- Battery and Adapter Power Selection
- Backup and Standby Power
- Power-Path Management
- Servers and Networking Equipment
- Surveillance Systems
- Telematics and Tracking Systems

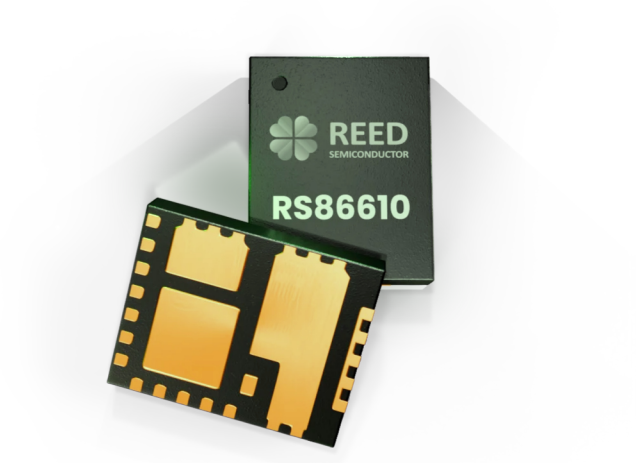

Description

The RS86610 is a highly integrated 60A smart power stage combining high-side and low-side power MOSFETs, gate drivers, current sensing, and temperature sensing in a compact 4mm × 5mm TLGA package. Operating from 2.5V to 16V, the device is designed for high-density multiphase voltage regulators powering AI accelerators, GPUs, CPUs, FPGAs, ASICs, servers, and networking systems.

The integrated half-bridge architecture reduces parasitic inductance compared with discrete implementations, helping improve switching performance, power density, and PCB layout. The RS86610 supports switching frequencies up to 3MHz at 5V VIN and 2MHz at 12V VIN, enabling high-frequency power conversion with smaller external components.

A 3.3V-compatible tri-state PWM interface provides straightforward connection to multiphase controllers, while integrated current and temperature sensing support system monitoring and control.

Integrated protection includes VIN and VDD undervoltage lockout (UVLO), high-side overcurrent protection, cycle-by-cycle current limiting, and overtemperature protection (OTP) for robust operation under demanding load conditions.

Typical Application Schematic

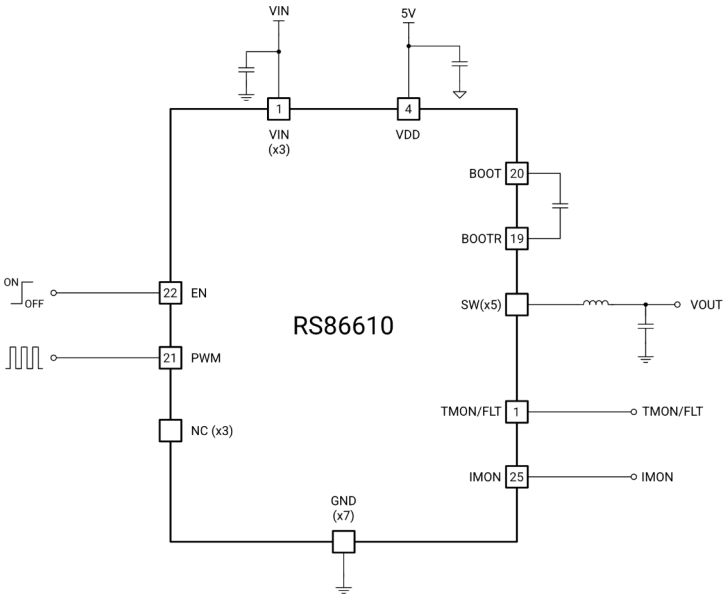

© 2026 Reed Semiconductor datasheet. All rights reserved

Ordering Information

PART NUMBER	PACKAGE	SIZE	MSL RATING	SHIPPING METHOD	PACKAGE MARKING
RS86610GLTR	TLGA-25	4 × 5mm		5000u Tape & Reel	R86610

Top Marking



Line 1

- RS: Prefix of Reed Semiconductor (R is replaced by E for engineering lots)
- YY: Year code
- WW: Week code

Line 2

- PPPPP: Truncated part number

Line 3

- LLLLL: Lot code
- S: Assembly site code

© 2026 Reed Semiconductor datasheet. All rights reserved

Package Reference

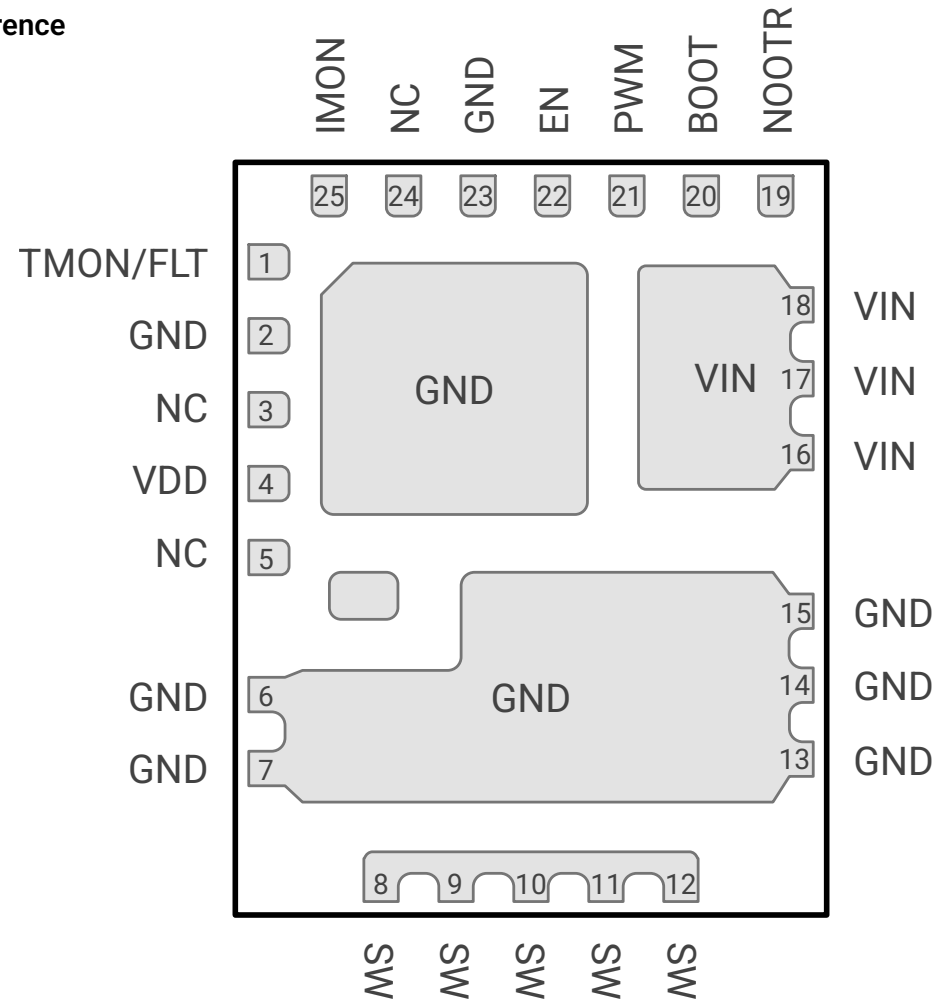

TLGA-25 (4 × 5mm)

© 2026 Reed Semiconductor datasheet. All rights reserved

Pin Descriptions

PIN	NAME	TYPE	DESCRIPTION
1	TMON/FLT	O	Temperature monitor and fault output. Provides temperature-monitoring and fault-indication functions.
2, 6, 7, 13—15, 23	GND	G	Ground. Connect to the PCB ground plane with multiple vias to minimize impedance and thermal resistance.
3, 5, 25	NC	—	No internal connection.
4	VDD	P	5V bias supply input for the internal control circuitry and gate driver. Connect a 1μF or larger ceramic bypass capacitor from VDD to GND.
8—12	SW	P	Switch node. Connection between the high-side and low-side MOSFETs. Connect to the output inductor.
16—18	VIN	P	Power input. Connect input bypass capacitors close to the VIN and GND pins to minimize the high-frequency switching loop and input voltage transients.
19	BOOTR	P	High-side gate-driver return. Internally connected to the SW node.
20	BOOT	P	Bootstrap supply. Connect a 0.1μF to 1μF ceramic bootstrap capacitor between BOOT and BOOTR.
21	PWM	I	PWM control input. 3.3V-compatible tri-state input controlling the power stage.
22	EN	I	Enable input. Logic high enables the device; logic low disables the device.
25	IMON	O	Current monitor output. Provides an output current sense signal with a gain of 5μA/A.

Type: I = Input, O = Output, I/O = Bidirectional, P = Power, G = Ground, — = No Connect.

© 2026 Reed Semiconductor datasheet. All rights reserved

Package Dimensions

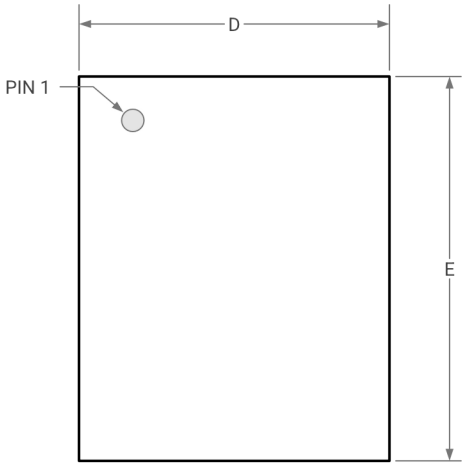

TOP VIEW

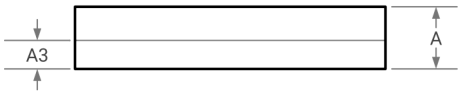

SIDE VIEW

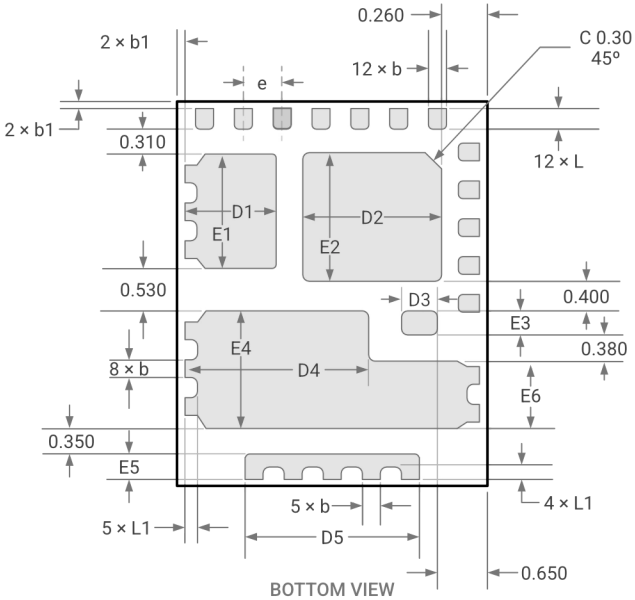

BOTTOM VIEW

REF	MIN	NOM	MAX
A	–	0.829	–
A3	0.284	0.329	0.374
D	3.900	4.000	4.100
E	4.900	5.000	5.100
D1	1.085	1.185	1.285
E1	1.420	1.520	1.620
D2	1.680	1.780	1.880
E2	1.570	1.670	1.770
D3	0.450 BSC		
E3	0.300 BSC		
D4	2.270	2.370	2.470
E4	1.440	1.540	1.640
D5	2.150	2.250	2.350
E5	0.200	0.300	0.400
E6	0.740	0.840	0.940
b	0.250 BSC		
b1	0.100 BSC		
e	0.500 BSC		
L	0.260BSC		
L1	0.175 BSC		

Notes

1. All dimensions are in millimeters.
2. Lead coplanarity shall be 0.1mm maximum.
3. Drawing is not to scale.

© 2026 Reed Semiconductor datasheet. All rights reserved

Recommended Land Pattern

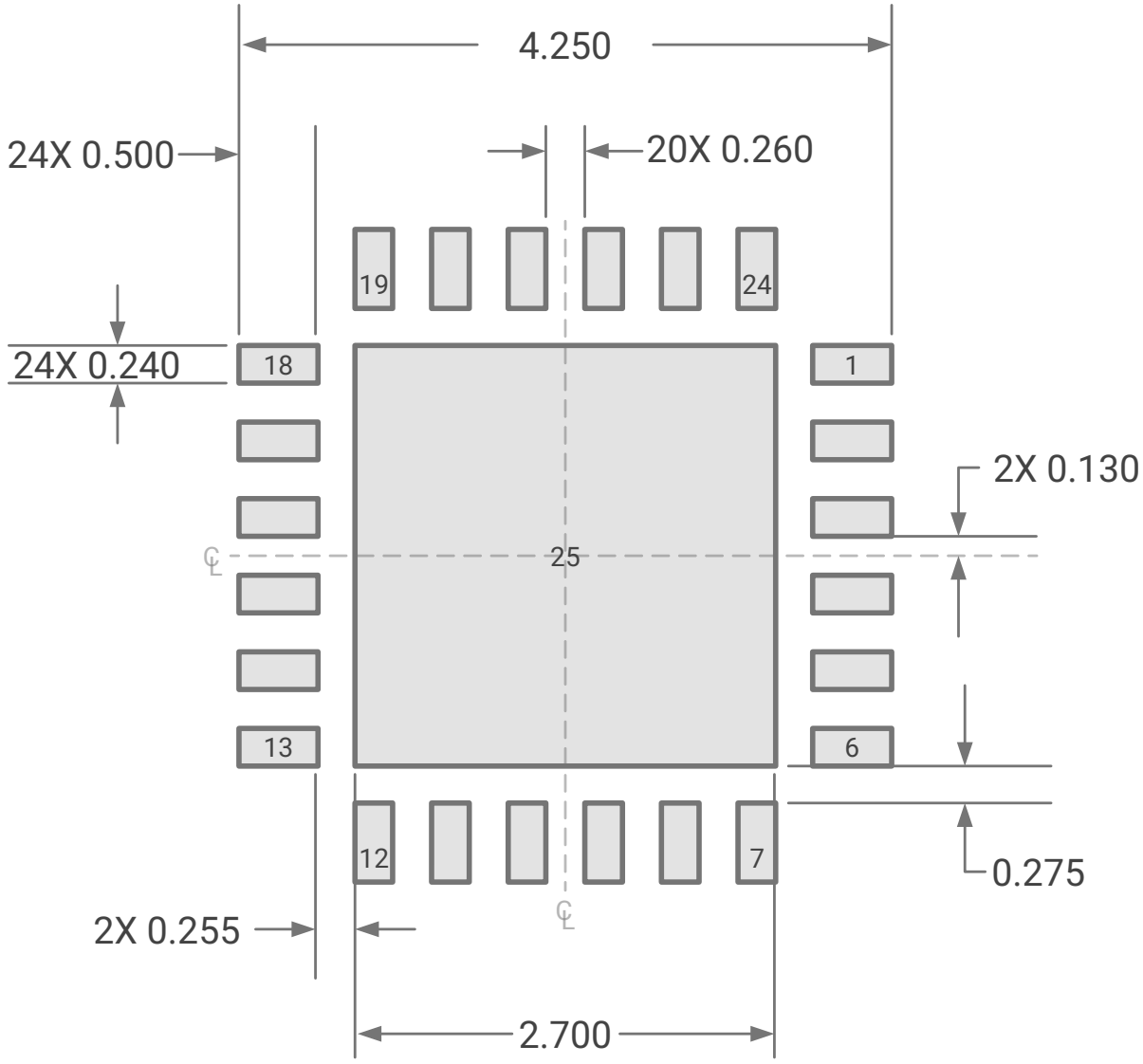

Note:

1. All dimensions are in millimeters.
2. Drawing is not to scale.

© 2026 Reed Semiconductor datasheet. All rights reserved

Tape and Reel Information

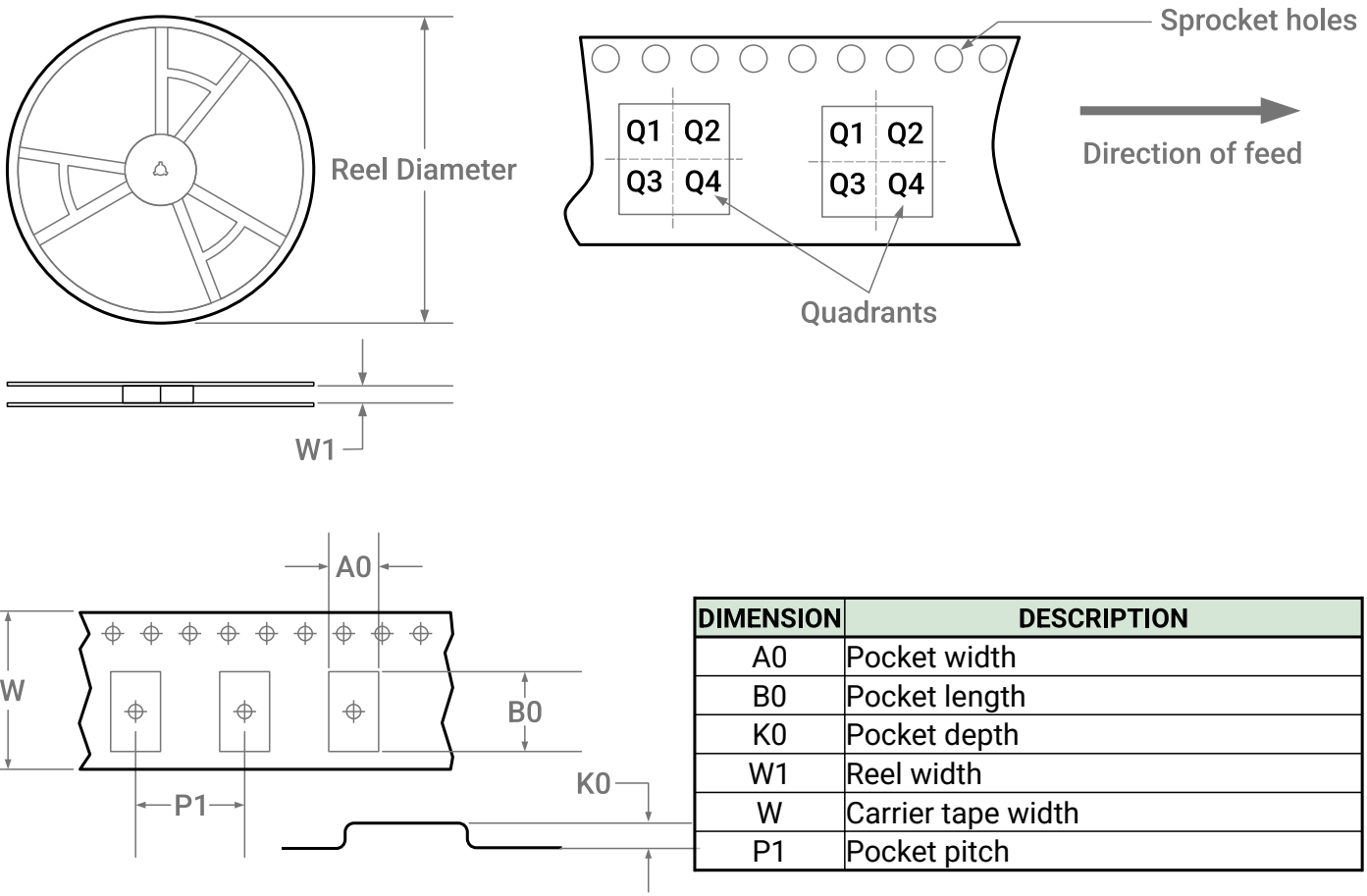

DIMENSION	DESCRIPTION
A0	Pocket width
B0	Pocket length
K0	Pocket depth
W1	Reel width
W	Carrier tape width
P1	Pocket pitch

PACKAGE SIZE	REEL DIAMETER	W1	A0	B0	K0	P1	W	PIN 1 QUADRANT
4 × 4	330	12.4	4.3	5.3	1.10	8.00	12.00	Q1

Note:
1. All dimensions are nominal
2. All dimensions are in millimeters (mm)

© 2026 Reed Semiconductor datasheet. All rights reserved

Pizza Box Dimensions

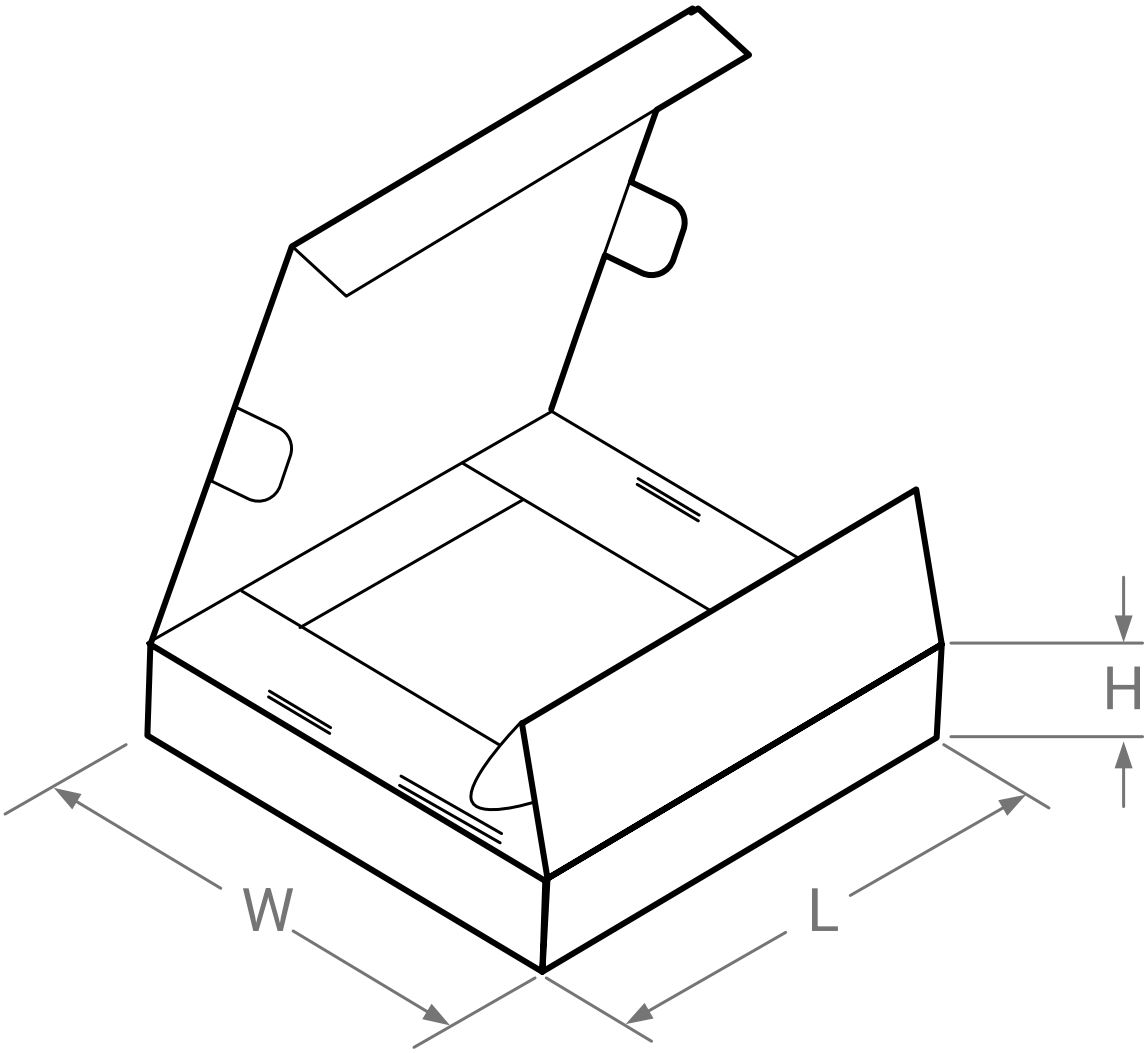

PACKAGE SIZE	UNITS / BOX	LENGTH	WIDTH	HEIGHT
4 × 5	5000	360	340	50

Notes:

1. All measurements are in millimeters;
2. All measurements are nominal.

© 2026 Reed Semiconductor datasheet. All rights reserved