RS86900 2.5V to 16V, 90A Smart Power-Stage in a 4 × 6 mm TLG-34 Package

Features

High Performance

- 2.5V to 16V operating input range
- Supports up to 90A peak and 45A continuous (TDC) output current
- Switching frequency up to 3MHz (5V VIN)
- Switching frequency up to 2MHz (12V VIN)
- 5V VDD supply for internal logic

Integrated Power Stage

- Integrated high-side and low-side MOSFETs
- Integrated high-current gate drivers
- Optimized low-parasitic half-bridge architecture
- Compact 4mm × 6mm TLGA package

Monitoring

- Integrated current sense
- Integrated temperature sense

Controller Compatibility

- Compatible with 3.3V tri-state PWM controllers

Protection Features

- VIN and VDD undervoltage lockout (UVLO)
- High-side overcurrent protection
- Cycle-by-cycle current limiting
- Overtemperature protection (OTP)

Environmental

- RoHS compliant
- Green package

Applications

- Server and AUX supplies
- Router and Networking
- Laptops

Description

The RS86900 is a highly integrated 90A Smart Power Stage housed in a compact 4mm × 6mm TLGA package. It combines high-side and low-side MOSFETs, gate drivers, current sensing, and temperature sensing into a single device, reducing solution size while maximizing efficiency and power density.

Operating from a 2.5V to 16V input supply, the RS86900 delivers 45A continuous (90A peak) output current and supports switching frequencies from 100kHz to 2MHz with a 12V input and up to 3MHz with a 5V input. Its monolithic architecture minimizes parasitic inductance and optimizes switching performance for high-current point-of-load converters.

Compatible with 3.3V tri-state PWM controllers, the RS86900 also integrates comprehensive protection features including VIN/VDD UVLO, high-side overcurrent protection, cycle-by-cycle current limiting, and overtemperature protection, making it well suited for server, AI accelerator, networking, and telecom power applications.

PART NUMBER	PACKAGE	SIZE (mm)
RS86900GLTR	TLGA - 34	4 × 6

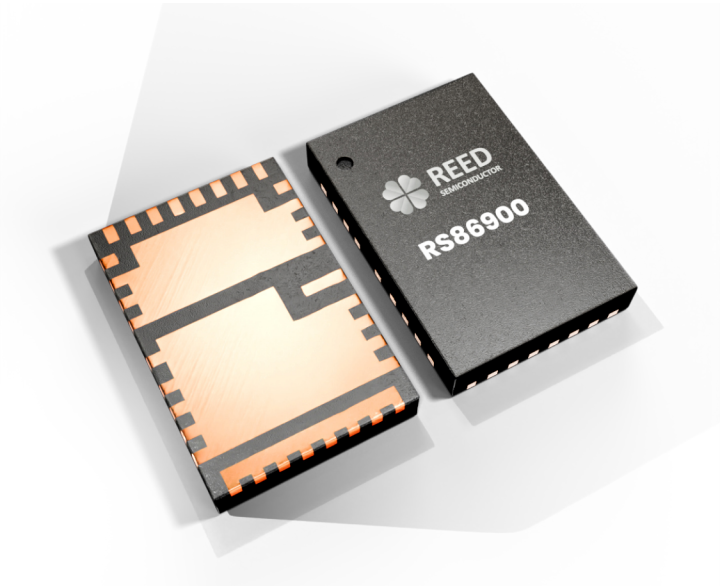

© 2026 Reed Semiconductor datasheet. All rights reserved

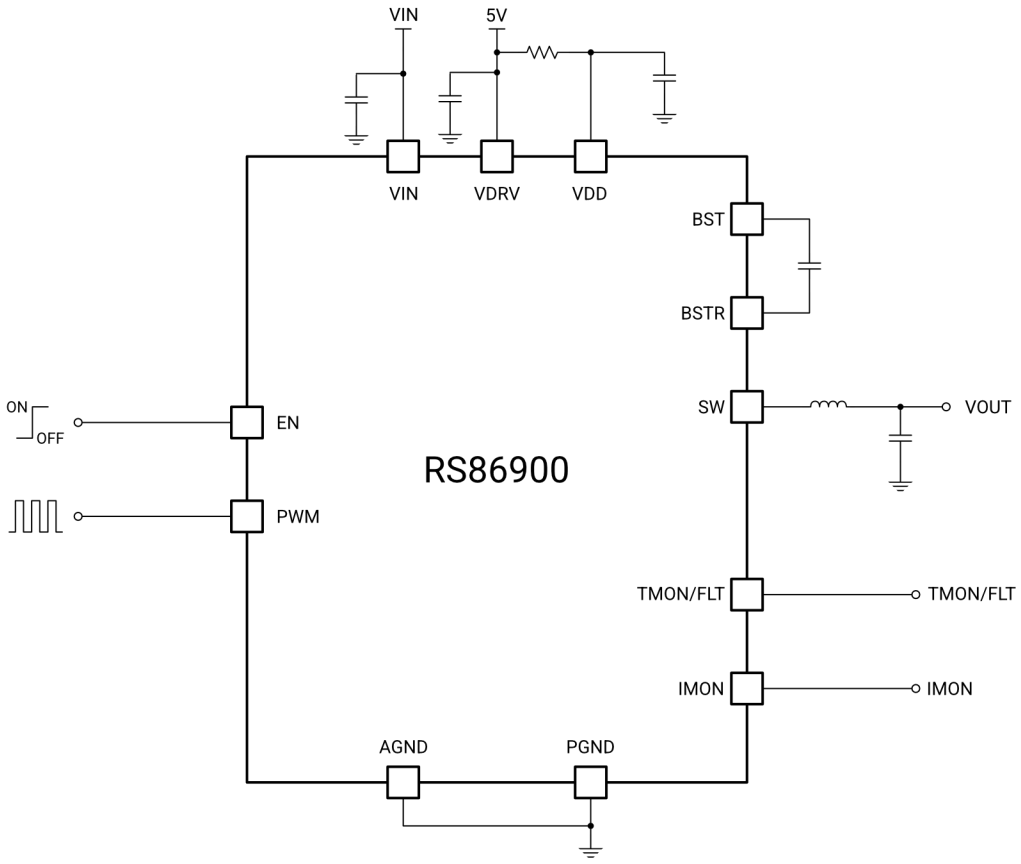

Typical Application Schematic

© 2026 Reed Semiconductor datasheet. All rights reserved

Package Reference

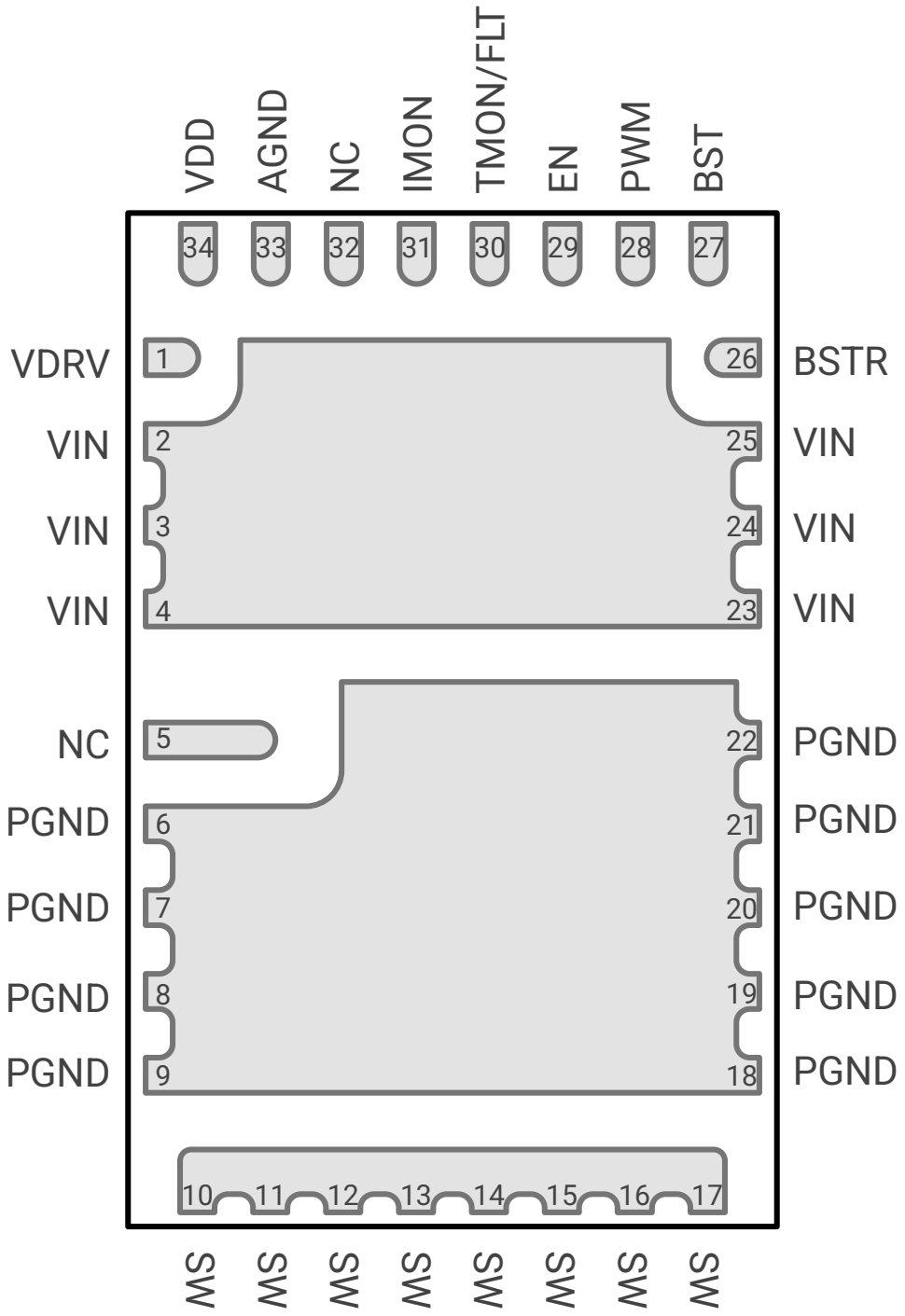

Top View

TLGA-34 (4×6mm)

© 2026 Reed Semiconductor datasheet. All rights reserved

Ordering Information

PART NUMBER	PACKAGE	SIZE	MSL RATING	SHIPPING METHOD	PACKAGE MARKING
RS86900GLTR	TLGA-34	4 × 6	Level - 3	5ku Tape & Reel	R86900

Top Marking

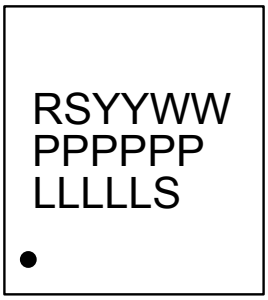

Line 1

- RS: Prefix of Reed Semiconductor (RS replaced by RE for engineering lot)
- YY: Year code
- WW: Week code

Line 2

- PPPPPP; Truncated part number

Line 3

- LLLLL: Lot code
- S: Assembly site code

Note: To improve clarity, this datasheet explicitly identifies all configurable ordering options. Earlier part numbers that omitted default option designators remain valid and fully supported.

© 2026 Reed Semiconductor datasheet. All rights reserved

Pin Descriptions

PIN	NAME	TYPE	DESCRIPTION
VIN	2 — 4, 23 — 25	P	Main input power supply (2.5V to 16V). Place low-ESR ceramic input capacitors as close as possible to the VIN and PGND pins to minimize input voltage ripple and switching transients.
PGND	6 — 9, 18 — 22	G	Power ground return for the internal power MOSFETs. Connect to a solid ground plane using multiple vias to minimize parasitic impedance and improve thermal performance.
SW	10 — 17	P	Switch (phase) node. Connects the high-side MOSFET source to the low-side MOSFET drain. Minimize copper area to reduce switching noise while maintaining adequate current-carrying capability.
VDRV	1	P	Gate driver power supply. Bypass to PGND with a low-ESR ceramic capacitor placed close to the device.
VDD	34	P	5V supply for the internal control circuitry. Bypass to AGND with a 1μF or larger ceramic capacitor placed close to the device.
AGND	33	G	Analog ground reference for the internal control and sensing circuitry. Connect to the ground plane at a quiet analog ground location.
BST	27	O	Bootstrap supply for the high-side gate driver. Connect a 0.1μF to 1μF ceramic capacitor between BST and BSTR and place it close to the device.
BSTR	26	I	Bootstrap return and switch-node reference for the high-side gate driver. Connect directly to the SW node.
PWM	28	I	PWM control input. Accepts a 3.3V tri-state PWM signal from the controller to drive the internal half-bridge.
EN	29	I	Device enable input. Drive high to enable operation and low to disable the power stage.
IMON	31	O	Analog current monitor output with a gain of 5μA/A. Connect a resistor to ground to generate a proportional voltage for system monitoring.
TMON/FLT	30	O	Temperature monitor and fault indicator output. Provides analog temperature monitoring and fault reporting for system protection.
NC	5, 32	—	No internal connection. Leave floating or connect to the PCB as recommended in the Layout Guidelines.

Type: I = Input, O = Output, I/O = Bidirectional, P = Power, G = Ground, — = No Connect.

© 2026 Reed Semiconductor datasheet. All rights reserved

Package Dimensions

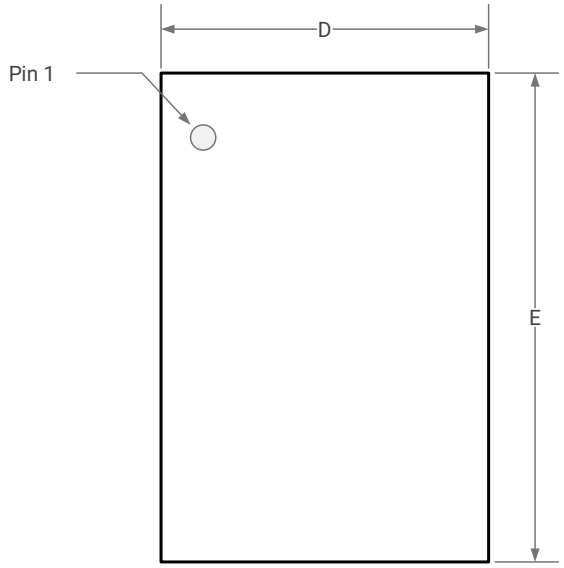

TOP VIEW

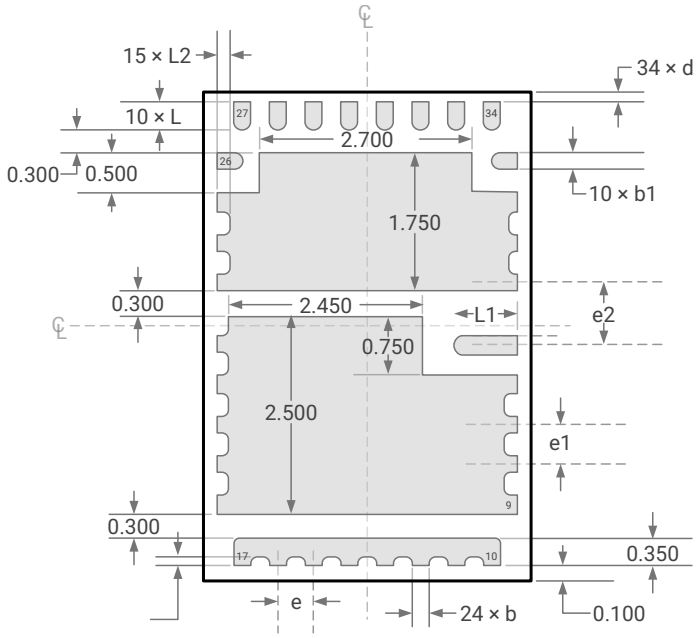

BOTTOM VIEW

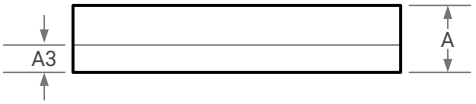

SIDE VIEW

Notes

1. All dimensions are in millimeters.
2. Lead coplanarity is 0.1mm max.
3. JEDEC reference is MO-303.
4. Drawing is not to scale.

REF	MIN	NOM	MAX
A	—	0.829	—
A3		0.320 BSC	
D	3.900	4.000	4.100
E	5.900	6.000	6.100
b	0.200	0.250	0.300
b1	0.200	0.250	0.300
e		0.450 BSC	
e1		0.500 BSC	
e2		0.800 BSC	
.d		0.100 BSC	
L	0.250	0.300	0.350
L1	0.750	0.800	0.850
L2		0.150	

© 2026 Reed Semiconductor datasheet. All rights reserved

Recommended Land Pattern

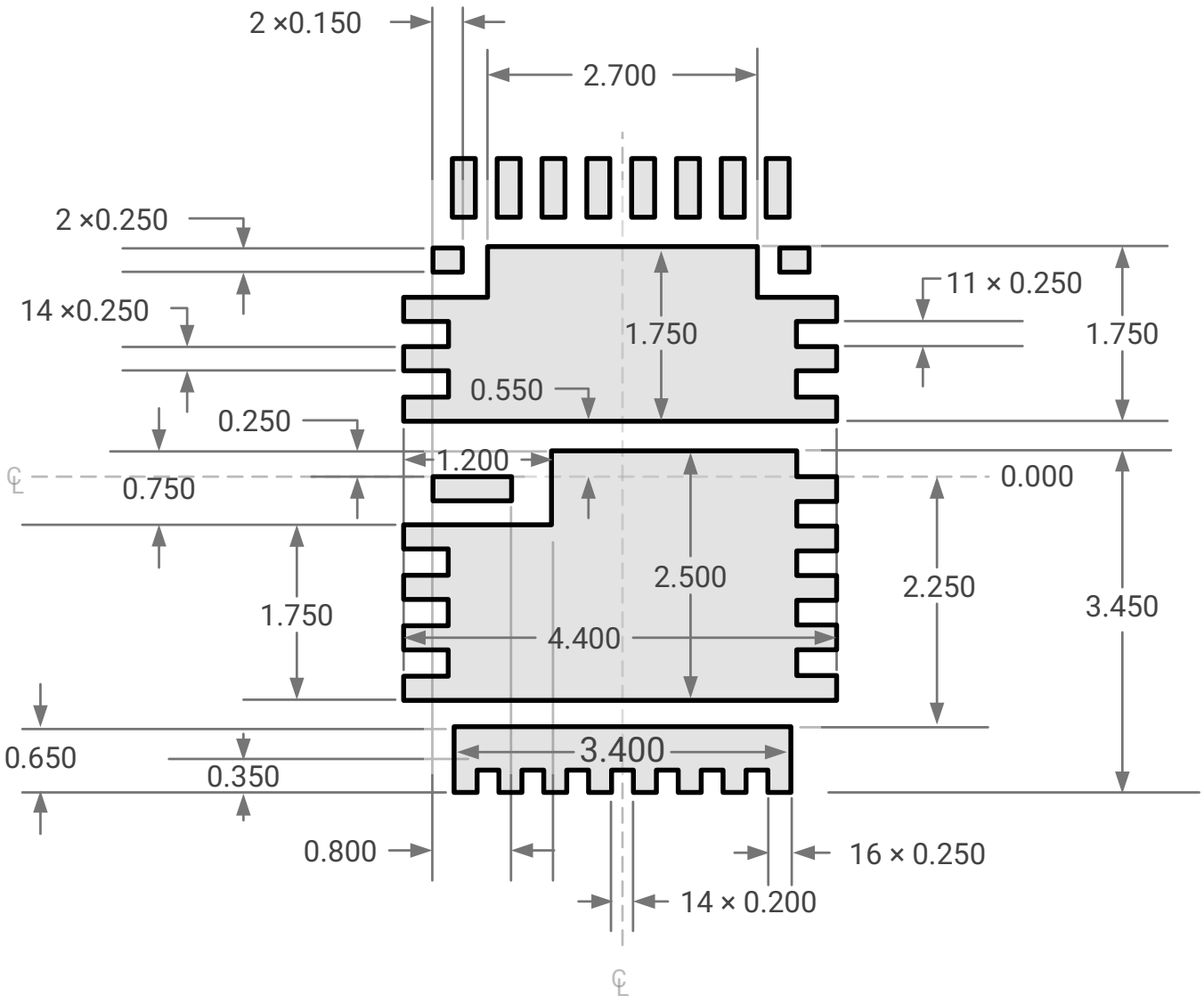

Notes:

1. All dimensions are in millimeters
2. Drawing is not to scale.

© 2026 Reed Semiconductor datasheet. All rights reserved

Tape and Reel Information

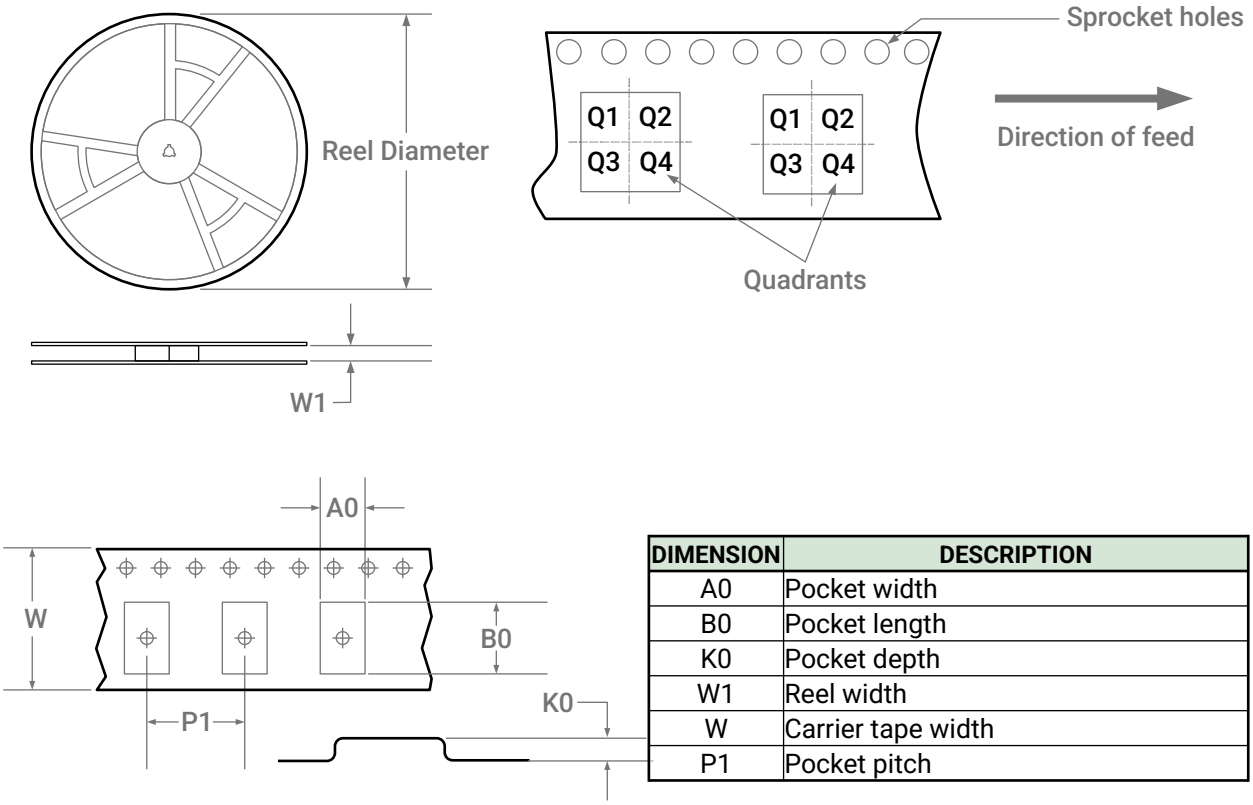

DIMENSION	DESCRIPTION
A0	Pocket width
B0	Pocket length
K0	Pocket depth
W1	Reel width
W	Carrier tape width
P1	Pocket pitch

DEVICE SIZE	REEL DIAMETER	W1	A0	B0	K0	P1	W	QUAD
4 × 6	330	16.4	4.3	6.3	1.05	8.0	16.0	Q1

Notes:

1. All dimensions are in millimeters
2. All dimensions are nominal

© 2026 Reed Semiconductor datasheet. All rights reserved

Pizza Box Dimensions

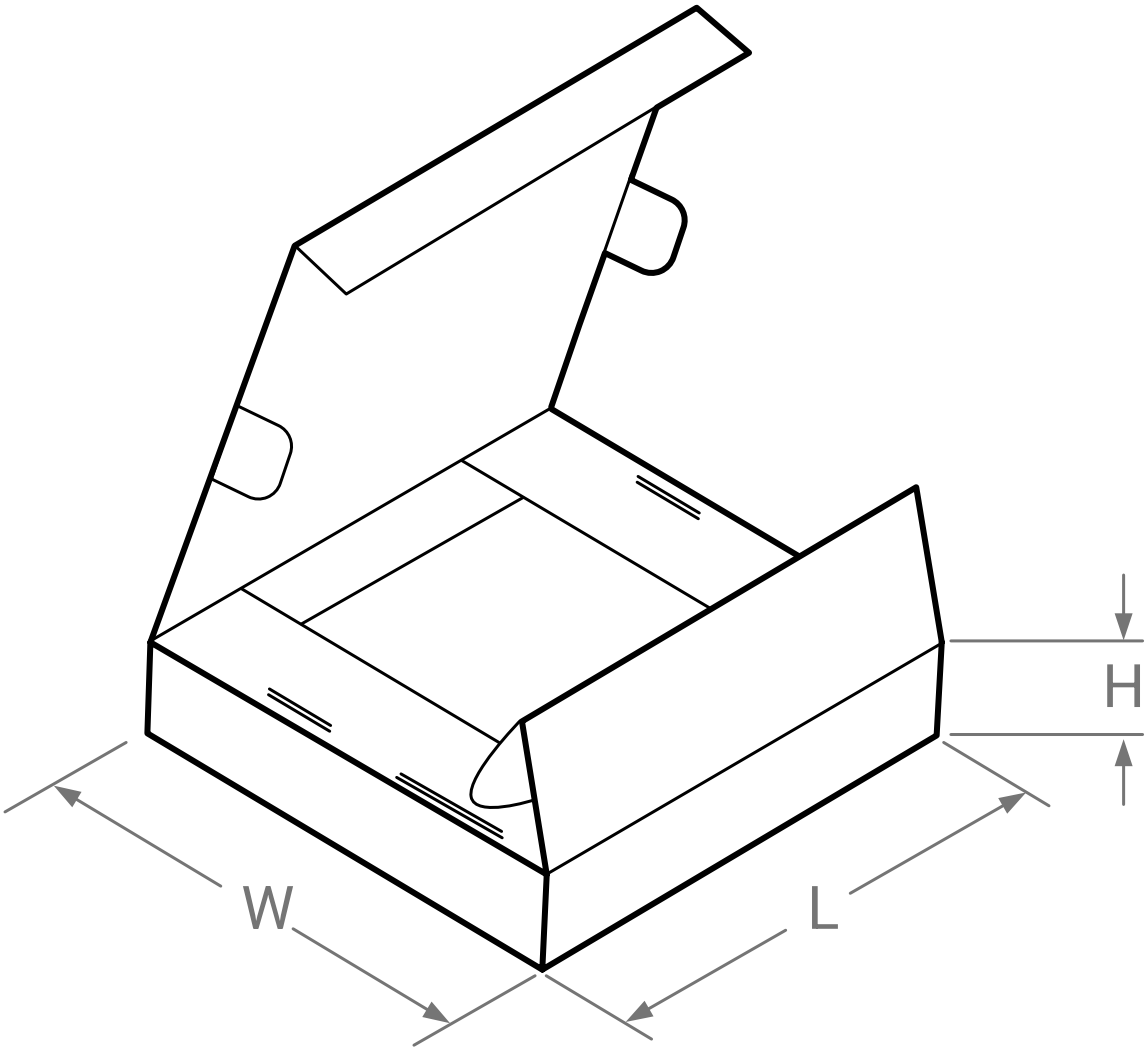

DEVICE SIZE	UNITS/BOX	L	W	H
4 × 6	5000	358	340	50

© 2026 Reed Semiconductor datasheet. All rights reserved